DEPARTMENT OF THE ARMY TECHNICAL MANUAL

DEPARTMENT OF THE AIR FORCE TECHNICAL ORDER

TM 11-867
TO 16-40BC787-5

Hallicrafters S-36

# RADIO RECEIVERS BC-787-B AND -C

*DEPARTMENTS OF THE ARMY AND THE AIR FORCE*
*JULY 1953*

*TM 11-867/TO 16-40BC787-5*

*This manual supersedes TM 11-867, 21 July 1944.*

# RADIO RECEIVERS

# BC-787-B AND -C

*United States Government Printing Office*
*Washington: 1953*

DEPARTMENTS OF THE ARMY AND
THE AIR FORCE
WASHINGTON 25, D. C., *1 July 1953*

TM 11–867/TO 16–40BC787–5 is published for the information and guidance of all concerned.

[AG 413.44 (2 Apr 53)]

BY ORDER OF THE SECRETARIES OF THE ARMY AND THE AIR FORCE:

OFFICIAL:
WM. E. BERGIN
*Major General, USA*
*The Adjutant General*

J. LAWTON COLLINS
*Chief of Staff, United States Army*

OFFICIAL:
K. E. THIEBAUD
*Colonel, USAF*
*Air Adjutant General*

N. F. TWINING
*Chief of Staff, United States Air Force*

DISTRIBUTION:
*Active Army:*
Tech Svc (1); Tech Svc Bd (1); AFF Bd (ea Svc Test Sec) (1); AFF (5); AA Comd (2); OS Maj Comd (5); Base Comd (5); MDW (2); Log Comd (5); A (5); CHQ (2); FT (2); Sch (5) except 11 (25); PMS&T 11 (1); Gen Dep (2); Dep 11 (20) except Sig Sec, Gen Dep (10); Tng Div (2); POE (10), OSD (2); Lab 11 (5); Mil Dist (3); Field Maint Shops 11 (3); Two (2) copies to each of the following T/O&E's: 11–107; 11–127A; 11–128; 11–500 CA, CB, CC, CD; RA thru RJ: 11–587; 11–592; 11–597.
*NG:* Same as Active Army except one copy to each unit.
*Army Reserve:* Same as Active Army except one copy to each unit.
For explanation of distribution formula, see SR 310–90–1.

## WARNING

### HIGH VOLTAGE

is used in the operation of
this equipment.

### DEATH ON CONTACT

may result if operating personnel
fail to observe safety precautions.

# CONTENTS.


| | | Paragraphs | Page |
|---|---|---|---|
| **CHAPTER 1. INTRODUCTION** | | | |
| *Section* | *I.* General | 1, 2 | 1 |
| | *II.* Description and data | 3–9 | 1 |
| **CHAPTER 2. OPERATING INSTRUCTIONS** | | | |
| *Section* | *I.* Service upon receipt of Radio Receivers BC–787–B and –C | 10–13 | 7 |
| | *II.* Controls and instruments | 14, 15 | 8 |
| | *III.* Operation under usual conditions | 16–18 | 9 |
| | *IV.* Operation under unusual conditions | 19–22 | 10 |
| **CHAPTER 3. ORGANIZATIONAL MAINTENANCE INSTRUCTIONS** | | | |
| *Section* | *I.* Organizational tools and equipment | 23, 24 | 12 |
| | *II.* Preventive maintenance services | 25–28 | 12 |
| | *III.* Lubrication | 29, 30 | 15 |
| | *IV.* Weatherproofing | 31, 32 | 15 |
| | *V.* Trouble shooting at organizational maintenance level | 33–36 | 16 |
| **CHAPTER 4. THEORY** | | 37–49 | 19 |
| **5. FIELD MAINTENANCE INSTRUCTIONS** | | | |
| *Section* | *I.* Trouble shooting at field maintenance level | 50–57 | 36 |
| | *II.* Repairs | 58, 59 | 46 |
| | *III.* Alinement procedures | 60–64 | 46 |
| | *IV.* Final testing | 65–75 | 47 |
| **CHAPTER 6. SHIPMENT AND LIMITED STORAGE AND DEMOLITION TO PREVENT ENEMY USE** | | | |
| *Section* | *I.* Shipment and limited storage | 76, 77 | 50 |
| | *II.* Demolition of materiel to prevent enemy use | 78, 79 | 50 |
| **APPENDIX I. REFERENCES** | | ----- | 51 |
| | **II. IDENTIFICATION TABLE OF PARTS** | ----- | 53 |
| **INDEX** | | ----- | 64 |

**A** Position of operator and victim

**B** Compression phase

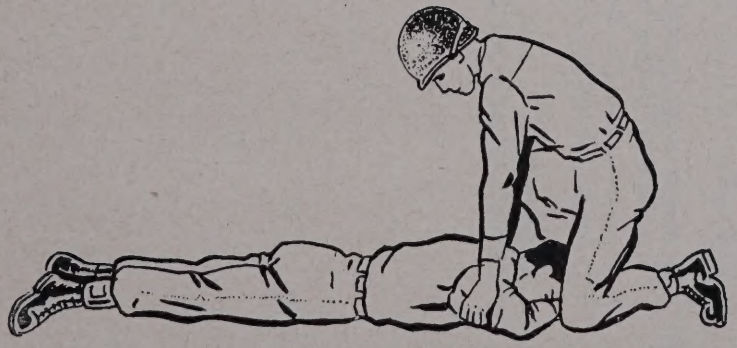

**C** Expansion phase (arm lift)

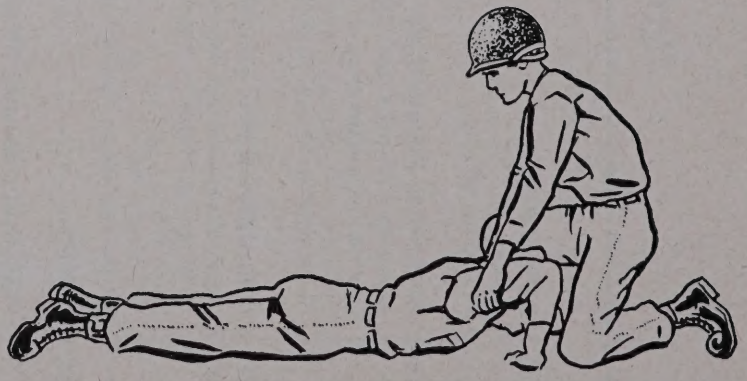

**D** Expansion phase (arm release)

# ARTIFICIAL RESPIRATION

## GENERAL PRINCIPLES

1. Seconds count! Begin at once! Don't take time to move the victim unless you must. Don't loosen clothes, apply stimulants or try to warm the victim. Start resuscitation! Get air in the lungs! You may save a life!

2. Place the victim's body in a prone position, so that any fluids will drain from the respiratory passages. The head should be extended and turned sideward *never flexed forward;* the chin shouldn't sag, since obstruction of the respiratory passages may occur.

3. Remove any froth or debris from the mouth with your fingers. Draw the victim's tongue forward.

4. Begin artificial respiration. Continue it rhythmically and without any interruption until natural breathing starts or the victim is pronounced dead. Try to keep the rhythm smooth. Split-second timing is not absolutely essential.

5. When the victim starts breathing, or when additional help is available loosen the clothing; remove it, if it's wet; keep the victim warm. Shock should receive adequate attention. Don't interrupt the rhythmical artificial technique for these measures. Do them only when you have help or when natural breathing has started.

6. When the victim is breathing, adjust your timing to assist him. Don't fight his efforts to breathe. Synchronize your efforts with his. After resuscitation, keep him lying down until seen by a physician or until recovery seems certain.

7. Don't wait for mechanical resuscitation! If an approved model is available, use it, but, since mechanical resuscitators are only slightly more effective than properly performed "push-pull" manual technique, *never* delay manual resuscitation for it.

## BACK-PRESSURE ARM LIFT METHOD

1. *Position of Victim.* Place the victim in the prone (face-down) position. Bend his elbows; place one hand upon the other. Turn his face to one side, placing his cheek upon his hands.

2. *Position of Operator.* Kneel on your left or right knee, at the victim's head, facing him. Your knee should be at the side of the victim's head close to his forearm, your foot should be near his elbow. Kneel on both knees if you find it more comfortable, with one knee on each side of the head. Place your hands on the flat of the victim's back so that their heels are just below the lower tip of his shoulder blades. With the tip of your thumbs touching spread your fingers downward and outward. (See A)

3. *Compression Phase.* Rock forward until your arms are approximately vertical and allow the weight of the upper part of your body to exert a slow, steady, even, downward pressure upon your hands. This forces air out of the lungs. Keep your elbows straight and press almost directly downward on the back. (See B)

4. *Expansion Phase.* Release the pressure, avoid any finish thrust, and commence to rock backward slowly. Place your arms upon the victim's arms just above the elbows, and draw his arms upward and toward you. Apply just enough lift to feel resistance and tension at the victim's shoulders.

Don't bend your elbows. As you rock backward, the victim's arms will be drawn toward you. (The arm lift expands the chest by pulling on the chest muscles, arching the back and relieving the weight on the chest.) Drop the arms gently to the ground or floor. This completes the cycle. (See C and D). Now, repeat the cycle.

5. *Cycle Timing and Rhythm.* Repeat the cycle 10 to 12 times per minute. Use a steady uniform rate of Press, Release, Lift, Release. Longer counts of about equal length should be given to the "Press" and "Lift" steps of the compression and expansion phases. Make the "Release" periods of minimum duration.

6. *Changing Position or Operator.*

(*a*) Remember that you can use either or both knees or can shift knees during the procedure, provided you don't break the rhythm. Observe how you rock forward with the back-pressure and backward with the arm-lift. The rocking motion helps to sustain the rhythm and adds to the ease of operation.

(*b*) If you tire and another person is available, you can "take turns." Be careful not to break the rhythm in changing. Move to one side and let your replacement come in from the other side. Your replacement begins the "Press-Release" after one of the "Lift-Release" phases, as you move away.

*Figure 1. Radio Receiver BC–787–(*) and Mounting FT–377–A, front view.*

*This manual supersedes TM 11-867, 21 July 1944*

# CHAPTER 1

# INTRODUCTION

## Section I. GENERAL

### 1. Scope

*a.* This manual contains the necessary instructions for the installation, maintenance, operation, and repair of Radio Receiver BC–787–(*). In addition to these instructions there are two appendixes covering a list of references and an identification table of parts.

*b.* Official nomenclature followed by (*) is used to indicate all models of the equipment used in this manual. Thus Radio Receiver BC–787–(*) represents Radio Receivers BC–787–B and –C.

### 2. Forms and Records

The following forms will be used for reporting unsatisfactory conditions of Army materiel and equipment.

*a.* DD Form 6, Report of Damaged or Improper Shipment, will be filled out and forwarded as prescribed in SR 745–45–5 (Army), and AFR 71–4 (Air Force).

*b.* DA Form 468, Unsatisfactory Equipment Report, will be filled out and forwarded to the Office of the Chief Signal Officer as prescribed in SR 700–45–5.

*c.* AF Form 54, Unsatisfactory Report, will be filled out and forwarded to Commanding General, Air Materiel Command, Wright-Patterson Air Force Base, Dayton, Ohio, as prescribed in SR 700–45–5 and AFR 65–26.

*d.* DA AGO Form 11–238, Operator First Echelon Maintenance Check List for Signal Corps Equipment (Radio Communication, Direction Finding, Carrier, Radar), will be prepared in accordance with instructions on the back of the form (fig. 6).

*e.* DA AGO Form 11–239, Second and Third Echelon Maintenance Check List for Signal Corps Equipment (Radio Communication, Direction Finding, Carrier, Radar), will be prepared in accordance with instructions on the back of the form (fig. 7).

*f.* Use other forms and records as authorized.

## Section II. DESCRIPTION AND DATA

### 3. Purpose and Use

*a.* Radio Receiver BC–787–(*) (fig. 1) is a 3-band superheterodyne receiver for mobile or fixed station use. It is designed for the reception of either a-m (amplitude-modulated) or f-m (frequency-modulated) signals in the frequency range of 27.8 to 143 mc (megacycles). C-w (continuous-wave) signals may be received by using the bfo (beat-frequency oscillator). Stand-by operation of the receiver can be controlled from a remote point. The receiver may be operated with its internal power supply or external *A* and *B* batteries.

*b.* The receiver is mounted on Mounting FT–377–A (fig. 1) which reduces mechanical shock that would otherwise be carried to the receiver chassis. The mounting consists of two base rails to which four pedestals are bolted. Each pedestal terminates in a rubber grommet. The four rubber grommets support and cushion a metal tray. The receiver is held firmly in the tray by four trunk clamps.

### 4. Technical Characteristics

| | |
|---|---|
| Frequency range | 27.8 to 143 mc. |
| Band 1 | 27.8 to 47 mc. |
| Band 2 | 46 to 82 mc. |
| Band 3 | 81 to 143 mc. |

| | |
|---|---|
| Types of signals | A-m, f-m, c-w, mcw (modulated continuous waves) (tone and voice). |
| Number of tubes | 15. |
| Intermediate frequency | 5.25 mc. |
| Input power requirements | 115 volts or 230 volts, 50/60 cycles; or 6-volt storage battery and 270 volts of B battery. A vibrator power supply may be used if it meets the above requirements. |
| Power consumption | Approximately 110 watts. |
| Output impedance | 500 ohms and 5,000 ohms; 600 ohms (balanced). |
| Fuse rating (C model) | 3 amperes, 250 volts. |
| Fuse rating (B model) | 2 amperes, 250 volts. |
| Dial calibration accuracy | 3 percent of signal frequency. |

## 5. Packaging Data

(fig. 2)

Radio Receiver BC–787–(*) is packaged as shown in figure 2 for export shipment. Protection from water, moisture, and vapor is provided by the two inner barrier waterproofed packages and the two fiberboard cartons. The front panel of the receiver is protected by a padded wooden frame. All sides of the receiver are padded with corrugated cardboard. Bags of silica gel are placed within the inner covering to aid further in the absorption of moisture. Mounting FT–377–A is packed within the carton with the receiver. The spare parts are packaged in a separate carton and shipped in the package which contains the receiver. The size, volume, and weight of the export crate are indicated in the chart below.

*Note.* Items may be packaged in a manner different from that shown, depending on supply channel.

| No. of crates | Height (in.) | Width (in.) | Length (in.) | Volume (cu ft) | Unit weight (lb) |
|---|---|---|---|---|---|
| 1 | 12¾ | 20½ | 29¼ | 5.2 | 170 |

## 6. Table of Components

| Component | Required No. | Height (in.) | Depth (in.) | Length (in.) | Volume (cu ft) | Unit weight (lb) |
|---|---|---|---|---|---|---|
| Radio Receiver BC–787–(*) | 1 | 9 5/16 | 14½ | 21¼ | 3.76 | 78 |
| Mounting MT-1079/FR | 1 | 4⅞ | 14½ | 21¼ | 3.37 | 12 |
| Mounting FT–377–A | 1 | 4⅞ | 14½ | 21¼ | 3.37 | 12 |
| Technical manual | 2 | | | | | |
| Total | | | | | 10.50 | 102 |

*Note.* This list is for general information only. See appropriate supply publications for information pertaining to requisition of spare parts.

## 7. Description of Radio Receiver BC–787–(*), Mounting FT–377–A, and Mounting MT–1079/FR

*a. Radio Receiver BC–787–(*).* The receiver is housed in an all-metal ventilated cabinet. A hinged lid is provided to permit access to all adjustments and vacuum tubes except the three acorn tubes in the r-f (radio-frequency) section. These three tubes are under the shield which covers the r-f section of the receiver. The receiver is a 15-tube superheterodyne radio designed for the reception of a-m, c-w, and f-m signals. It operates in the frequency range of 27.8 to 143 mc in three bands (band 1: 27.8 to 47 mc; band 2: 46 to 82 mc; and band 3: 81 to 143 mc). All external connections, with the exception of the headphones, are made at the rear of the equipment. Also, on the rear apron of the chassis, a terminal board provides for 500- and 5,000-ohm impedance outputs. A loudspeaker, or a line that terminates in a like impedance, is fed from this board. The jack for the headphones, on the front panel, provides a 600-ohm impedance output which floats above ground. If a 600-ohm line balanced to ground is required, put a jumper between the 600-ohm center tap posts on the terminal board on the rear apron.

*b. Mounting FT–377–A and Mounting MT–1079/FR.* The B model receiver is mounted on

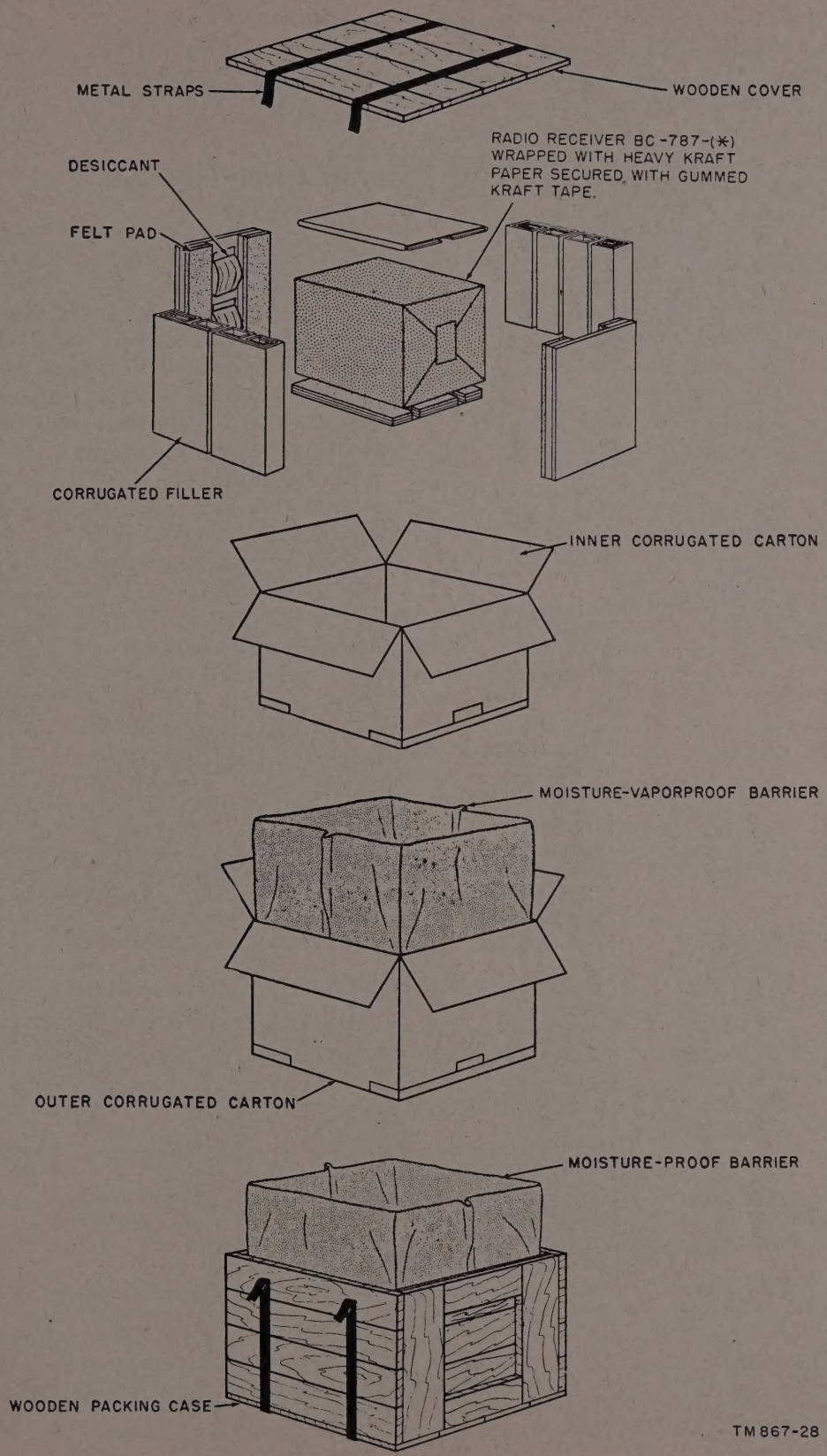


*Figure 2. Packaging and packing of Radio Receiver BC–787–(*).*

Mounting FT–377–A, and the C model receiver is mounted on Mounting MT–1079/FR, to reduce mechanical shock. Each mounting consists of two base rails to which four metal encased rubber shock mounts are bolted. These shock mounts support a metal tray in which the receiver fits. The receiver is held firmly by four trunk clamps attached to the tray.

## 8. Running Spares

The running spares supplied with Radio Receiver BC–787–(*) are listed in the chart below—

| Item | Quantity |
|---|---|
| Vacuum tube type 956 | 4 |
| Vacuum tube type 954 | 4 |
| Vacuum tube type 6AC7 | 6 |
| Vacuum tube type 6AB7 | 3 |
| Vacuum tube type 6SK7 | 2 |
| Vacuum tube type 6H6 | 4 |
| Vacuum tube type 6SL7GT | 3 |
| Vacuum tube type OD3/VR–150 | 2 |
| Vacuum tube type 6V6GT | 6 |
| Vacuum tube type 5U4G | 3 |
| Vacuum tube type 6J5 | 2 |
| Vacuum tube type 955 | 4 |
| Fuse FU–50 (3 amp) (C model) | 5 |
| Fuse FU–27 (2 amp) (B model) | 5 |
| Lamp LM–27 | 10 |

## 9. Differences in Models

(figs. 3 and 4)

*a.* The operating controls and their uses are the same for Radio Receiver BC–787–(*). However, JAN type parts are used in the C model wherever possible and some components have been changed to improve performance. With the exception of the TONE circuit in the C model, circuitry is basically the same in both the B and C models. The B model uses one fuse FS1 (2 amperes) while the C model uses two fuses (FS1 and FS2), rated at 3 amperes each, in the a-c (alternating-current) input circuit.

*b.* Refer to appendix II and the following chart for detailed differences in component values and the circuit location of the components in both models of the equipment.

| Component | Radio Receiver BC–787–B | Radio Receiver BC–787–C |
|---|---|---|
| Fuse FS1 | Located on front panel | Located on rear apron of chassis. |
| Fuse FS2 | None | Rear apron of chassis. |
| C3 | Across T1 secondary | T5 secondary bypass. |
| C63 | Across T4 secondary | Across part of T4 secondary. |
| R48 | In tone circuit | In grid circuit of V2 (band 2 only). |
| C64 | Across T5 secondary | Across part of T5 secondary. |
| R9 (refer to T10) | Used in both sharp and broad selectivity | Used in broad selectivity only. |
| R17 | Unbypassed cathode resistor for V3 | Not used. |
| R72 | Not used | In cathode circuit of V3 for sharp selectivity. |
| R15 | Bypassed for rf in V3 plate circuit | Part of unbypassed plate load. |
| R75 | Not used | In screen circuit of V5. |
| R27 | V5 plate circuit decoupling (1,000 ohms) | Part of V5 plate load (120 ohms). |
| C11 | Coupling V9 to V11 (8,200 μμf (micro-microfarad)). | Across C1C (1–2.5 μμf). |
| C84 | Not used | Across C58 in T7 plate winding. |
| R71 | Not used | Plate to plate, V8. |
| C38 | In cathode circuit of V11 and V12 (20 μf (microfarad)). | In cathode circuit of V9 (25 μf). |
| R12 | Tone control circuit (1 meg) | In cathode circuit of V9 (pin 3) (120 ohms). |
| C40 | B+ filter (.05 μf) | Bypass for R47 (25 μf). |
| C41 | Coupling V9 to V12 | Not used. |
| C83 | Not used | B+ filter. |
| Capacitors C42, C43, and C44 | Supplied as a single unit (fig. 4) | Supplied as individual components (fig. 3). |
| Fuse FS1 and FS2 in a-c input line | Fuse FS1 (2 amp) | Fuses FS1 and FS2 (3 amp ea). |
| C30 | Not used | V7 plate circuit decoupling. |
| R61 | Contained within L5 | A separate component. |
| C34 | V12 plate circuit (8,200 μμf) | V12 control grid circuit (1,000 μμf). |
| Mounting FT–377–A | Holds receiver | Not used. |
| Mounting MT–1079/FR | Not used | Holds receiver. |

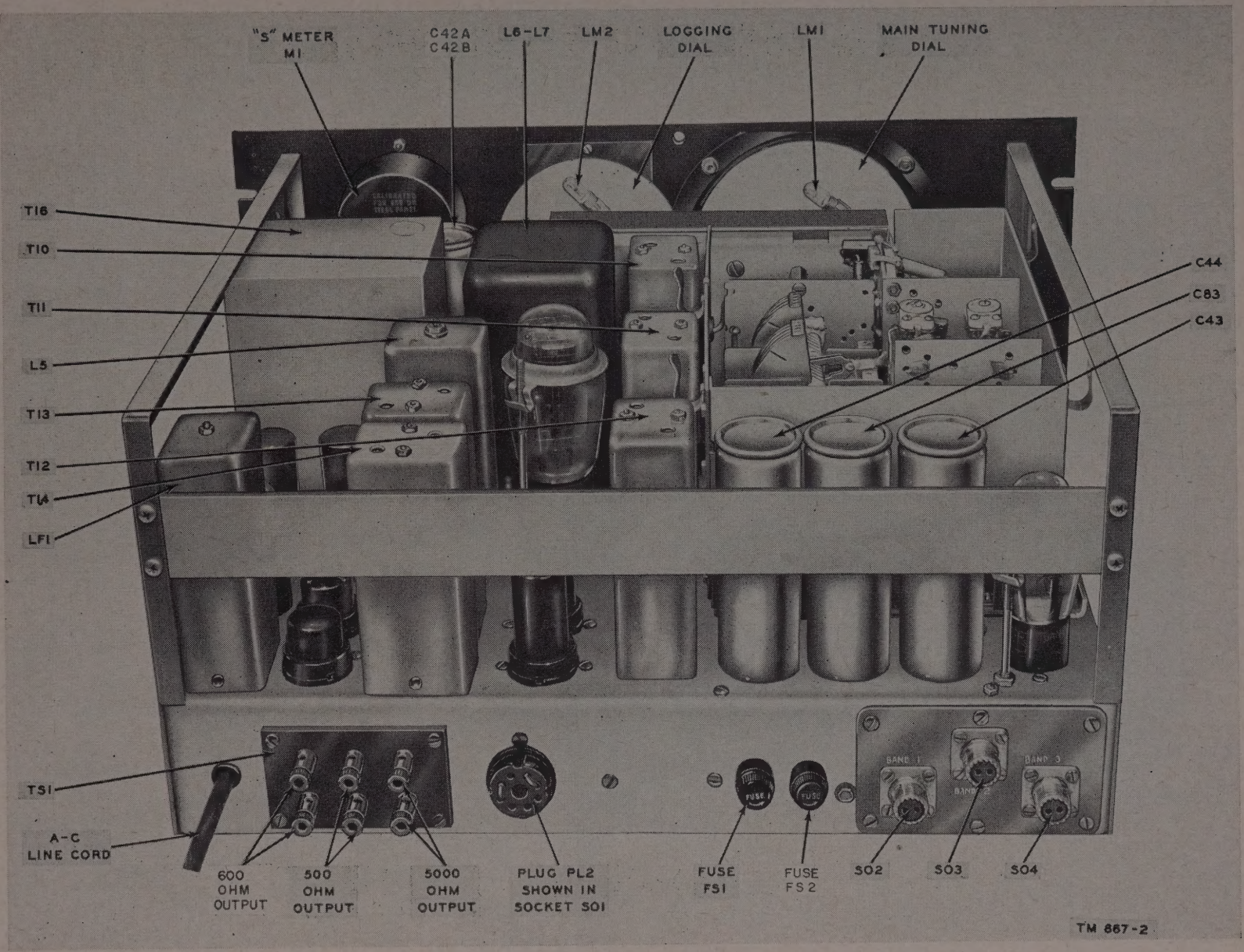


*Figure 3. Radio Receiver BC–787–C, top rear view.*

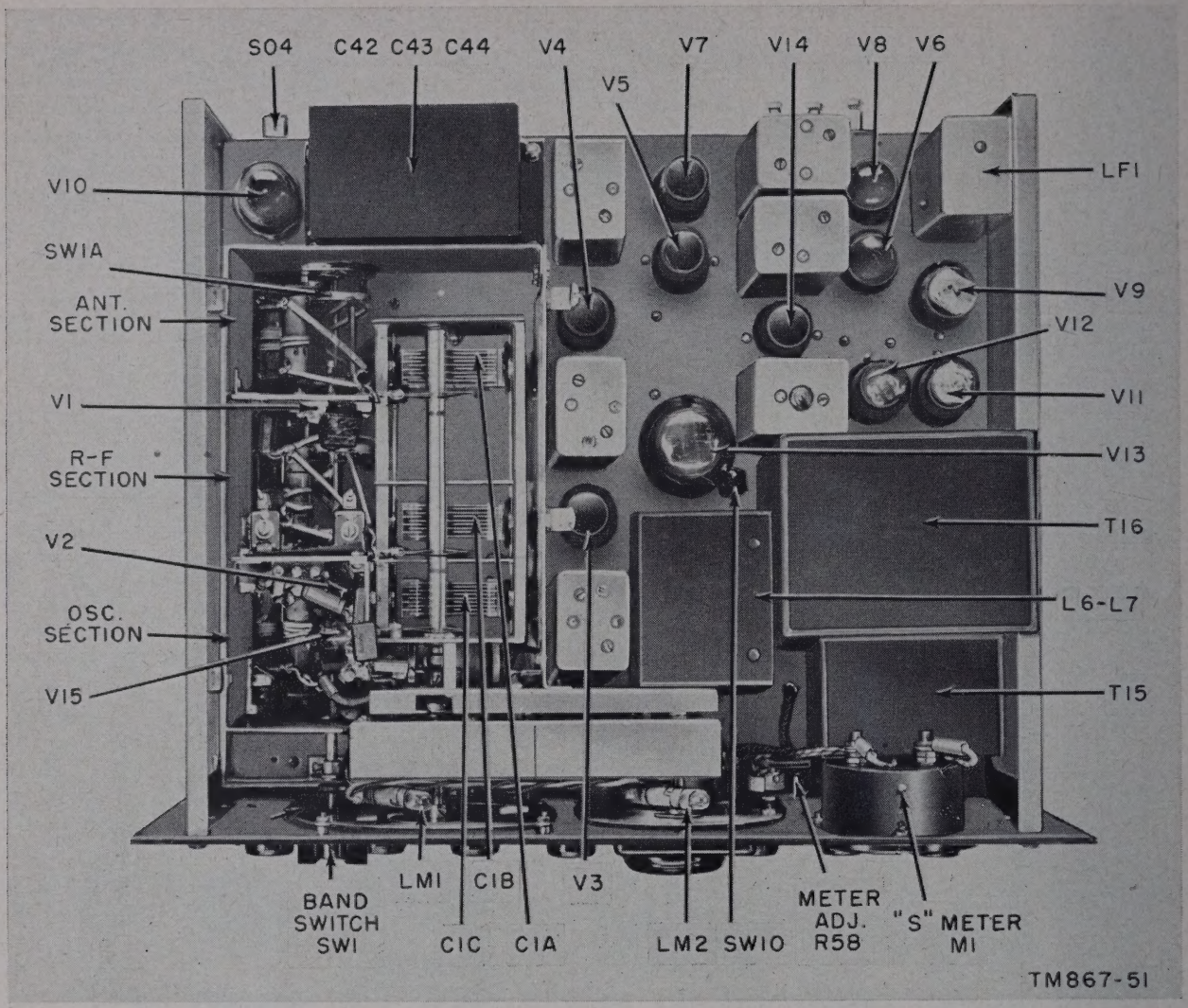


*Figure 4. Radio Receiver BC–787–B, top view, r-f shield cover removed.*

# CHAPTER 2

# OPERATING INSTRUCTIONS

## Section I. SERVICE UPON RECEIPT OF RADIO RECEIVER BC–787–B and –C

### 10. Siting

The receiver should be located so as to provide easy access to the controls on the front panel and the cable connections on the rear of the chassis. In a permanent installation, where it is not necessary to change connections on the rear of the receiver frequently, the receiver may be located with just enough clearance to permit adequate rear ventilation, and access to the front panel. Unless an extension power cord is available, the receiver must be placed within 6 feet of the a-c power source outlet. Keep the receiver away from the sources of electrical interference or mechanical vibration. Antenna location also will determine the receiver site. The receiver is designed for indoor or sheltered operation. Protect the receiver to prevent conditions of excessive moisture or extreme temperature. If the receiver is a component of a larger equipment, place the receiver in a convenient location for easy operation with the above factors considered.

### 11. Uncrating, Unpacking, and Checking New Equipment
(fig. 2)

***Caution:*** Be careful when uncrating, unpacking, and handling the equipment; it is easily damaged. If it is damaged, a complete overhaul might be required or the equipment might be rendered useless. Follow the unpacking instructions in the order given to provide the most rapid means of safely removing the receiver and the spare parts from the crate.

*a. General.* Equipment may be shipped in oversea packing cases or in domestic packing cases. When new equipment is received, select a location where the equipment may be unpacked without exposure to the elements and which is convenient to the permanent or semipermanent installation of the equipment. The instructions in *b* below apply to equipment packed in export packing cases. Aside from checking to see that all components are present and undamaged, no special unpacking procedures are necessary for equipment shipped in carrying cases.

*b. Step-By-Step Instructions for Uncrating and Unpacking Equipment* (fig. 2).

(1) Place the packing crate as near the operating position as convenient.
(2) Cut and fold back the metal straps.
(3) Remove the nails with a nail puller. Remove the top and one side of the packing case. Do not attempt to pry off the sides and top; the equipment may be damaged.
(4) Remove the waterproof containers or the moistureproof barrier, and any excelsior or corrugated paper covering the equipment inside the crate.
(5) Remove the equipment from its carrying case and place it on a workbench or near its final location.
(6) Inspect the equipment for possible damage incurred during shipment.
(7) Check the contents of the carrying case against the master packing slip.

*Note.* Save the original packing cases and containers for both export and domestic shipments. They can be used again when the equipment is repacked for storage or shipment.

### 12. Installation and Connections of Equipment

*a Mounting FT–377–A or Mounting MT–1079/FR.* Each mounting may be placed on a table or desk for a temporary installation. For a permanent installation, bolt the mounting to a table top, or bench top, with the four bolts that are supplied with the mounting.

*b. Radio Receiver BC–787–(*).* Place the receiver in the shock-mounted tray. Use the four trunk clamps to secure the receiver to the mounting.

*c. Antenna Connections.* Connect the three antenna coaxial cables to the antenna plug receptacles on the rear apron of the chassis. The receptacles are designated as follows: BAND 1; BAND 2; BAND 3. Each socket is Socket SO–264 (fig. 3). The coaxial cables attached to the antenna are fitted with Plug PL–284 for a straight connection, and Plug PL–293 adapter is fitted to Plug PL–284 for a right-angle connection.

***Caution:*** Before applying power to the receiver, by connecting Plug PL–1 to an a-c source of power, or connecting a d-c (direct-current) source of power through socket SO 1, refer to paragraph 15.

*d. Pilot Lamps.* Two pilot Lamps (LM–1 and LM–2) are located behind the translucent calibrated dial in both models of the equipment. Raise the lid of the receiver cabinet to locate the lamps (figs. 3 and 4).

*e. Fuse.* Check to see that fuses FS1 in the B model front panel, and FS1 and FS2 in the rear chassis of the C model, are in their holders and in good operating condition.

*f. Headset.* Plug a headset into the jack marked PHONES on the front panel.

*g. Loudspeaker.* Terminal board TS1, on the rear apron of the chassis, provides 500-ohm and 5,000-ohm impedance outputs (fig. 3). Either a loudspeaker or a line terminated in a like impedance may be connected to these output terminals. Also, there is a 600-ohm impedance line provision on TS1 to ground the center tap of the 600-ohm output. This line is made available by using the PHONES jack on the front panel. Both sides of the 600-ohm line are insulated from chassis ground. By connecting a jumper between the posts marked 600 CT on terminal strip TS1, the line may be balanced to ground.

### 13. Service upon Receipt of Used or Reconditioned Equipment

*a.* Follow the instructions in paragraph 11 when unpacking used or reconditioned equipment.

*b.* If used equipment is received for service, check the tags or other sources of information regarding the condition of the equipment. When the condition of the equipment is doubtful, and no other information is available, submit the equipment to a final test as described in paragraphs 65 through 75. A thoroughly reconditioned piece of equipment may be considered in the same condition as new equipment and the operational instructions will be the same.

## Section II. CONTROLS AND INSTRUMENTS

### 14. General

Haphazard operation or improper setting of the the controls can cause unsatisfactory operation of the receiver. For this reason, it is important to know the function of every control. The actual operation of the equipment is discussed in paragraphs 16 through 18.

### 15. Controls

The following chart lists the controls and instruments which are located on the front panel of Radio Receiver BC–787–(*) (fig. 1).

| Control | Function |
|---|---|
| R.F. GAIN control dial (R11) | Varies cathode voltage of V3 and V4 and operates switch SW3. |
| BAND SWITCH 1–2–3 (SW1) | Used to select the desired frequency band. |
| A.V.C. switch (SW4) | In OFF position, shorts avc voltage to ground. |
| ANTENNA control (C2) | Tunes antenna input transformer secondary winding. |
| SEND-REC. switch (SW5) | In the SEND position, opens B+ line. For stand-by when in the REC. position. |
| SELECTIVITY-A.C. OFF-SHARP-BROAD switch (SW7) | Turns the receiver on and off when operating from an a-c source. Controls the bandwidth of the i-f (intermediate-frequency) amplifier stages. |
| TONE switch (SW9) | Varies the audio fidelity from bass boost through high fidelity to h-f (high-frequency) cutoff. |
| A.N.L. switch (SW6) | In ON position, decreases extraneous interference. |
| TUNING wheel (C1) | Tunes the receiver to the desired frequency. |
| PHONES jack (J1) | 600-ohm output for a headset or line. |
| METER ADJ (R58) | Returns the S meter dial pointer to its 0 position when receiving a-m signals. |

| Control | Function |
|---|---|
| PITCH CONTROL (C60) | Varies the pitch of c-w signals. |
| B.F.O. switch (SW2) | Turns on the bfo circuit for receiving c-w signals. |
| A.M.-F.M. switch (SW8) | For a-m or f-m reception. |
| S meter (M1) | Indicates the carrier strength of a-m signals; indicates tuning for f-m signals. |
| A.F. GAIN control (R43) | Controls the audio output level of the receiver. |

## Section III. OPERATION UNDER USUAL CONDITIONS

### 16. Starting Procedure

*a. A-C Operation.* The receiver may be operated from a 115- or 230-volt, 50/60-cycle, a-c power source. Operate switch SW10 (fig. 4) for the correct line voltage source to be used. Before turning on the a-c power, Plug PL–2 must be in socket SO 1, which is located on the rear apron of the receiver chassis (fig. 3). This is necessary to provide continuity in the power circuits.

*b. D-C Operation.* The receiver may be operated from external batteries that deliver 6 volts at 4.5 amperes and 270 volts at 145 milliamperes. For such operation, connect the batteries to the spare unwired Plug PL–2. Use the plug to replace the original Plug PL–2 in socket SO 1 (fig. 5).

*c. Remote Stand-By Operation.* The equipment may be controlled from a remote point by connecting wire leads to pins 3 and 4 of spare Plug PL–2. Connect the other ends of the leads to an external switch or relay at the remote point. Insert Plug PL–2 into socket SO 1. Set switch SW5 at REC.

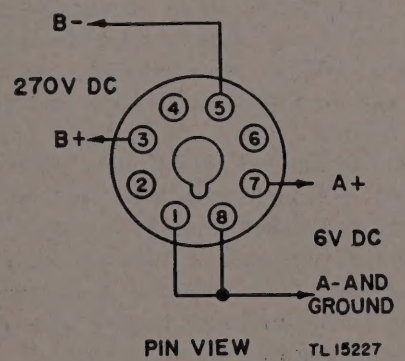


*Figure 5. Radio Receiver BC–787–(*), wiring diagram for d-c power plug.*

### 17. Operating Procedure

*a. A-M Signal Reception.* To receive a-m signals, set the front panel controls (fig. 1) as follows:

(1) Operate the SELECTIVITY dial to the SHARP position for reception of phone signals.
(2) Operate the A.M.-F.M. dial to the A.M. position.
(3) Operate the BAND SWITCH to the band covering the desired frequency.
(4) Operate the A.V.C. toggle switch to the ON position.
(5) Operate the SEND-REC. toggle switch to the REC. position.
(6) Operate the B.F.O. toggle switch to the OFF position.
(7) Turn the R.F. GAIN dial clockwise until tuning meter switch SW3 snaps on.
(8) Turn the TUNING wheel until the frequency of the desired signal is indicated. Adjust for maximum signal strength on the tuning meter.
(9) Adjust the ANTENNA trimmer dial for maximum signal strength on the tuning meter.
(10) Rotate the A.F. GAIN control for the desired signal level on the headset or loudspeaker.
(11) Set the TONE dial at HIGH FID. or BASS BOOST when the signal-to-noise ratio is high, or to NORMAL or LOW when the signal-to-noise ratio is low.
(12) Unless background noise is excessive, operate the A.N.L. toggle switch to the OFF position.

*b. F-M Signal Reception.* To receive f-m signals, set the front panel controls as follows:

(1) Operate the SELECTIVITY dial to BROAD.
(2) Turn the A.M.-F.M. dial to F.M.
(3) Operate the BAND SWITCH to the desired frequency band.
(4) Operate the SEND-REC. toggle switch to REC.

(5) Operate the B.F.O. toggle switch to OFF.
(6) Turn the R.F. GAIN dial clockwise until tuning meter switch SW3 snaps on.
(7) Turn the TUNING wheel until the frequency of the desired signal is indicated on the dial. Adjust the TUNING wheel for center 0 position on tuning meter M1.
(8) Adjust the ANTENNA trimmer dial for maximum signal strength on meter M1.
(9) Adjust the A.F. GAIN dial for the desired signal level on the headset or loudspeaker.
(10) Operate the TONE dial to BASS BOOST or HIGH FID.
(11) Operate the A.N.L. toggle switch to OFF.

*c. C-W Reception.* To receive c-w signals, set the front panel controls as follows:

(1) Operate the SELECTIVITY dial to SHARP.
(2) Operate the A.M.-F.M. dial to A.M.
(3) Operate the BAND SWITCH to the desired frequency band.
(4) Operate the A.V.C. toggle switch to OFF.
(5) Operate the SEND-REC. toggle switch to REC.
(6) Operate the B.F.O. toggle switch to ON.
(7) Adjust the PITCH CONTROL dial to zero.
(8) Turn the R.F. GAIN dial to maximum.
(9) Turn the TUNING wheel until the dial indicates the frequency of the received signal. Use headphones or the loudspeaker and tune for maximum signal strength. Make a final setting for a suitable listening pitch near 100 cps (cycles per second).
(10) Adjust the ANTENNA trimmer dial for maximum signal strength as heard in the headphones or loudspeaker.
(11) Adjust the A.F. GAIN control for the desired signal strength.
(12) Operate the TONE control dial to LOW.

### 18. Stopping Procedure

Operate the SELECTIVITY switch dial to A.C. OFF.

## Section IV. OPERATION UNDER UNUSUAL CONDITIONS

### 19. General

The operation of Radio Receiver BC–787–(*) may be difficult in regions where extreme cold, heat, humidity, moisture, sand conditions, etc. prevail. In the following paragraphs, instructions are given on procedures for minimizing the effect of these unusual operating conditions.

### 20. Operation in Arctic Climates

Subzero temperatures and climatic conditions associated with cold weather affect the efficient operation of the equipment. Instructions and precautions for operation under such adverse conditions are as follows:

*a.* Handle the equipment carefully.

*b.* Keep the equipment warm and dry. If the receiver is not in a heated inclosure, construct an insulated box for the receiver. Turn the SELECTIVITY dial to SHARP or BROAD. Leave the switch in this position for several minutes to permit the heated tube filaments to warm the inside of the receiver. If necessary, the switch should be left in the ON position continuously with the SEND-REC. switch in the SEND position.

*c.* Wear a knitted woolen cap over the earphones when operating the receiver in the open air, unless the headsets have rubber earpieces. When headsets without rubber earpieces are worn, the edges of the ears may freeze without the operator being conscious of this condition. Never flex rubber ear caps; it may render them useless. If water gets into the headphones, or if moisture condenses within them, it may impede the actuation of the diaphragm. When this happens, remove the bakelite cap and remove the ice and moisture from the receiver.

*d.* When equipment which has been exposed to the cold is brought into a warm room, it will sweat until it reaches room temperature. When the equipment has reached room temperature, dry it thoroughly. This condition also arises when equipment warms up during the day after exposure during a cold night.

### 21. Operation in Tropical Climates

When operated in tropical climates, radio equipment may be installed in tents, huts, or, when necessary, in underground dugouts. When equipment is installed below ground, or in swampy

areas, moisture conditions are more acute than normal in the tropics. Ventilation is usually very poor. The high relative humidity causes condensation of moisture on the equipment whenever the temperature of the equipment becomes lower than that of the ambient air. To minimize this condition, place lighted electric bulbs under the equipment.

## 22. Operation in Desert Climates

*a.* Conditions similar to those encountered in tropical climates often prevail in desert areas. Use the same measures to insure proper operation of the equipment.

*b.* The main problem which arises with equipment operation in desert areas is the large amount of sand, dust, or dirt which enters the moving parts of radio equipment, such as motors and power units. The ideal preventive precaution is to house the equipment in a dustproof building. Since, however, such a building is seldom available and would require air conditioning, the next best precaution is to make the housing facilities as dustproof as possible with available materials. Hang wet sacking over the windows and doors; cover the inside walls with heavy paper; and, if a tent is used, secure the side walls of the tent with sand to prevent flapping in the wind.

*c.* Never tie power cords, signal cords, or other wiring connections to either the inside or the outside of tents. Desert areas are subject to sudden wind squalls which may jerk the connections loose or break the lines.

*d.* The equipment should be as free from dust as possible. Make frequent preventive maintenance checks (ch. 3). Pay close attention to the condition of the lubrication of the equipment. Excessive amounts of dust, sand, or dirt that come into contact with oil and grease result in grit, which will damage the equipment.

# CHAPTER 3

# ORGANIZATIONAL MAINTENANCE INSTRUCTIONS

## Section I. ORGANIZATIONAL TOOLS AND EQUIPMENT

### 23. Tools

The tools necessary for maintaining Radio Receiver BC–787–(*) are contained in Tool Equipment TE–41, or equal.

### 24. Materials

Materials required for organizational maintenance are as follows:

*a.* Orange stick.

*b.* Cheesecloth.

*c.* Carbon tetrachloride.

*d.* Paper, sand, or flint No. 0000.

*e.* Solvent, Dry Cleaning (SD) (Fed spec No. P–S–661a).

## Section II. PREVENTIVE MAINTENANCE SERVICES

### 25. Definition of Preventive Maintenance

Preventive maintenance is work performed on equipment (usually when the equipment is not in use) to keep it in good working order so that there will be a minimum of break-downs and needless interruptions in service. Preventive maintenance differs from trouble shooting and repair, since its object is to prevent certain troubles from occurring. Refer to AR 750–5.

### 26. General Preventive Maintenance Techniques

*a.* Use No. 0000 sandpaper to remove corrosion.

*b.* Use a clean, dry, lint-free cloth or a dry brush for cleaning.

(1) If necessary, except for electrical contacts, moisten the cloth or brush with solvent (SD); then wipe the parts dry with a cloth.

(2) Clean electrical contacts with a cloth moistened with carbon tetrachloride; then wipe them dry with a dry cloth.

***Caution:*** Repeated contact of carbon tetrachloride with the skin or prolonged breathing of the fumes is dangerous. Make sure adequate ventilation is provided.

*c.* If available, use dry compressed air at a line pressure not exceeding 60 pounds per square inch to remove dust from inaccessible places; be careful, however, or mechanical damage from the air blast may result.

*d.* For further information on preventive maintenance techniques, refer to TB SIG 178.

### 27. Use of Preventive Maintenance Forms

The decision as to what items on DA AGO Forms 11–238 and 11–239 are applicable to this equipment is a tactical decision to be made in the case of first echelon maintenance by the communications officer/chief or his designated representative, and in the case of the second and third echelon maintenance, by the individual making the inspection. Instructions for the use of each form appear on the reverse side of the form.

*b.* Circled items in figures 6 and 7 are partially or totally applicable to Radio Receiver BC–787–(*). References in the ITEM block refer to paragraphs in text which contain additional maintenance information.

### 28. Performing Preventive Maintenance

Perform the following preventive maintenance operations at the intervals indicated, unless these intervals are reduced by the local commander.

***Caution:*** Tighten screws, bolts, and nuts carefully. Fittings tightened beyond the pressure for which they are designed will be damaged or broken.

## OPERATOR FIRST ECHELON MAINTENANCE CHECK LIST FOR SIGNAL CORPS EQUIPMENT

**RADIO COMMUNICATION, DIRECTION FINDING, CARRIER, RADAR**

*INSTRUCTIONS: See other side*

| EQUIPMENT NOMENCLATURE | EQUIPMENT SERIAL NO. |
|---|---|
| RADIO RECEIVER BC-787-(*) | |

LEGEND FOR MARKING CONDITIONS: ✓ Satisfactory; X Adjustment, repair or replacement required; (X) Defect corrected.
NOTE: Strike out items not applicable.

### DAILY

| NO. | ITEM | CONDITION S | M | T | W | T | F | S |
|---|---|---|---|---|---|---|---|---|
| (1) | COMPLETENESS AND GENERAL CONDITION OF EQUIPMENT *(receiver, transmitter, carrying cases, wire and cable, microphones, tubes, spare parts, technical manuals and accessories).* PAR. 28a (1) | | | | | | | |
| (2) | LOCATION AND INSTALLATION SUITABLE FOR NORMAL OPERATION. PARS.10 AND 28a (2) | | | | | | | |
| (3) | CLEAN DIRT AND MOISTURE FROM ANTENNA, MICROPHONE, HEADSETS, CHESTSETS, KEYS, JACKS, PLUGS, TELEPHONES, CARRYING BAGS, COMPONENT PANELS. PAR. 28a (3) | | | | | | | |
| (4) | INSPECT SEATING OF READILY ACCESSIBLE "PLUCK-OUT" ITEMS: TUBES, LAMPS, CRYSTALS, FUSES, CONNECTORS, VIBRATORS, PLUG-IN COILS AND RESISTORS. PAR. 28a (4) | | | | | | | |
| (5) | INSPECT CONTROLS FOR BINDING, SCRAPING, EXCESSIVE LOOSENESS, WORN OR CHIPPED GEARS, MISALIGNMENT, POSITIVE ACTION. PAR. 28a (5) | | | | | | | |
| (6) | CHECK FOR NORMAL OPERATION. PAR. 28a (10) | | | | | | | |

### WEEKLY

| NO. | ITEM | CONDITION | NO. | ITEM | CONDITION |
|---|---|---|---|---|---|
| (7) | CLEAN AND TIGHTEN EXTERIOR OF COMPONENTS AND CASES, RACK MOUNTS, SHOCK MOUNTS, ANTENNA MOUNTS, COAXIAL TRANSMISSION LINES, WAVE GUIDES, AND CABLE CONNECTIONS. PAR. 28a (7) | | (13) | INSPECT STORAGE BATTERIES FOR DIRT, LOOSE TERMINALS, ELECTROLYTE LEVEL AND SPECIFIC GRAVITY, AND DAMAGED CASES. PAR. 28a (9) | |
| (8) | INSPECT CASES, MOUNTINGS, ANTENNAS, TOWERS, AND EXPOSED METAL SURFACES, FOR RUST, CORROSION, AND MOISTURE. PAR. 28a (12) | | (14) | CLEAN AIR FILTERS, BRASS NAME PLATES, DIAL AND METER WINDOWS, JEWEL ASSEMBLIES. PAR. 28a (3) | |
| 9 | INSPECT CORD, CABLE, WIRE, AND SHOCK MOUNTS FOR CUTS, BREAKS, FRAYING, DETERIORATION, KINKS, AND STRAIN. | | (15) | INSPECT METERS FOR DAMAGED GLASS AND CASES. PAR. 28a (11) | |
| 10 | INSPECT ANTENNA FOR ECCENTRICITIES, CORROSION, LOOSE FIT, DAMAGED INSULATORS AND REFLECTORS. | | 16 | INSPECT SHELTERS AND COVERS FOR ADEQUACY OF WEATHER-PROOFING. | |
| 11 | INSPECT CANVAS ITEMS, LEATHER, AND CABLING FOR MILDEW, TEARS, AND FRAYING. | | 17 | CHECK ANTENNA GUY WIRES FOR LOOSENESS AND PROPER TENSION. | |
| (12) | INSPECT FOR LOOSENESS OF ACCESSIBLE ITEMS: SWITCHES, KNOBS, JACKS, CONNECTORS, ELECTRICAL TRANSFORMERS, POWERSTATS, RELAYS, SELSYNS, MOTORS, BLOWERS, CAPACITORS, GENERATORS, AND PILOT LIGHT ASSEMBLIES. PAR. 28b (1) | | 18 | CHECK TERMINAL BOX COVERS FOR CRACKS, LEAKS, DAMAGED GASKETS, DIRT AND GREASE. | |

(19) IF DEFICIENCIES NOTED ARE NOT CORRECTED DURING INSPECTION, INDICATE ACTION TAKEN FOR CORRECTION.

DA AGO FORM 1 MAY 51 11-238 REPLACES DA AGO FORM 419, 1 DEC 50, WHICH IS OBSOLETE.

TM 867-29

*Figure 6. DA AGO Form 11-238.*

## SECOND AND THIRD ECHELON MAINTENANCE CHECK LIST FOR SIGNAL CORPS EQUIPMENT

RADIO COMMUNICATION, DIRECTION FINDING, CARRIER, RADAR

*INSTRUCTIONS: See other side*

EQUIPMENT NOMENCLATURE: RADIO RECEIVER BC-787-(*)

EQUIPMENT SERIAL NO.

LEGEND FOR MARKING CONDITIONS: ✓ Satisfactory; X Adjustment, repair or replacement required; (X) Defect corrected.
NOTE: Strike out items not applicable.

| NO. | ITEM | COND. |
|---|---|---|
| (1) | COMPLETENESS AND GENERAL CONDITION OF EQUIPMENT (*receiver, transmitter, carrying cases, wire and cable, microphones, tubes, spare parts, technical manuals and accessories*). PAR. 28a(1) | |
| (2) | LOCATION AND INSTALLATION SUITABLE FOR NORMAL OPERATION. PAR. 28a(2) | |
| (3) | CLEAN DIRT AND MOISTURE FROM ANTENNA, MICROPHONE, HEADSETS, CHESTSETS, KEYS, JACKS, PLUGS, TELEPHONES, CARRYING BAGS, COMPONENT PANELS. PAR. 28a(3) | |
| (4) | INSPECT SEATING OF READILY ACCESSIBLE "PLUCK-OUT" ITEMS: TUBES, LAMPS, CRYSTALS, FUSES, CONNECTORS, VIBRATORS, PLUG-IN COILS AND RESISTORS. PAR. 28b(1) | |
| (5) | INSPECT CONTROLS FOR BINDING, SCRAPING, EXCESSIVE LOOSENESS, WORN OR CHIPPED GEARS, MISALIGNMENT, POSITIVE ACTION. PAR. 28a(5) | |
| (6) | CHECK FOR NORMAL OPERATION. PAR. 28a(10) | |
| (7) | CLEAN AND TIGHTEN EXTERIOR OF COMPONENTS AND CASES, RACK MOUNTS, SHOCK MOUNTS, ANTENNA MOUNTS, COAXIAL TRANSMISSION LINES, WAVE GUIDES, AND CABLE CONNECTIONS. PAR. 28b(11) | |
| 8 | INSPECT CASES, MOUNTINGS, ANTENNAS, TOWERS, AND EXPOSED METAL SURFACES, FOR RUST, CORROSION, AND MOISTURE. | |
| 9 | INSPECT CORD, CABLE, WIRE, AND SHOCK MOUNTS FOR CUTS, BREAKS, FRAYING, DETERIORATION, KINKS, AND STRAIN. | |
| 10 | INSPECT ANTENNA FOR ECCENTRICITIES, CORROSION, LOOSE FIT, DAMAGED INSULATORS AND REFLECTORS. | |
| 11 | INSPECT CANVAS ITEMS, LEATHER, AND CABLING FOR MILDEW, TEARS, AND FRAYING. | |
| (12) | INSPECT FOR LOOSENESS OF ACCESSIBLE ITEMS: SWITCHES, KNOBS, JACKS, CONNECTORS, ELECTRICAL TRANSFORMERS, POWERSTATS, RELAYS, SELSYNS, MOTORS, BLOWERS, CAPACITORS, GENERATORS, AND PILOT LIGHT ASSEMBLIES. PAR. 28b(1) | |
| (13) | INSPECT STORAGE BATTERIES FOR DIRT, LOOSE TERMINALS, ELECTROLYTE LEVEL AND SPECIFIC GRAVITY, AND DAMAGED CASES. PAR. 28a(9) | |
| (14) | CLEAN AIR FILTERS, BRASS NAME PLATES, DIAL AND METER WINDOWS, JEWEL ASSEMBLIES. PAR. 28a(3) | |
| (15) | INSPECT METERS FOR DAMAGED GLASS AND CASES. PAR. 28a(11) | |
| 16 | INSPECT SHELTERS AND COVERS FOR ADEQUACY OF WEATHERPROOFING. | |
| 17 | CHECK ANTENNA GUY WIRES FOR LOOSENESS AND PROPER TENSION. | |
| 18 | CHECK TERMINAL BOX COVERS FOR CRACKS, LEAKS, DAMAGED GASKETS, DIRT AND GREASE. | |
| (19) | ELECTRON TUBES - INSPECT FOR LOOSE ENVELOPES, CAP CONNECTORS, CRACKED SOCKETS; INSUFFICIENT SOCKET SPRING TENSION; CLEAN DUST AND DIRT CAREFULLY; CHECK EMISSION OF RECEIVER TYPE TUBES. PAR. 28b(2) | |
| 20 | INSPECT FILM CUT-OUTS FOR LOOSE PARTS, DIRT, MISALIGNMENT AND CORROSION. | |
| (21) | INSPECT FIXED CAPACITORS FOR LEAKS, BULGES, AND DISCOLORATION. PAR. 28b(3) | |
| 22 | INSPECT RELAY AND CIRCUIT BREAKER ASSEMBLIES FOR LOOSE MOUNTINGS; BURNED, PITTED, CORRODED CONTACTS; MISALIGNMENT OF CONTACTS AND SPRINGS; INSUFFICIENT SPRING TENSION; BINDING OF PLUNGERS AND HINGE PARTS. | |
| (23) | INSPECT VARIABLE CAPACITORS FOR DIRT, MOISTURE, MISALIGNMENT OF PLATES, AND LOOSE MOUNTINGS. PAR. 28b(4) | |
| (24) | INSPECT RESISTORS, BUSHINGS, AND INSULATORS, FOR CRACKS, CHIPPING, BLISTERING, DISCOLORATION AND MOISTURE. PAR. 28b(5) | |
| (25) | INSPECT TERMINALS OF LARGE FIXED CAPACITORS AND RESISTORS FOR CORROSION, DIRT AND LOOSE CONTACTS. PAR. 28b(12) | |
| (26) | CLEAN AND TIGHTEN SWITCHES, TERMINAL BLOCKS, BLOWERS, RELAY CASES, AND INTERIORS OF CHASSIS AND CABINETS NOT READILY ACCESSIBLE. PAR. 28b(6) | |
| (27) | INSPECT TERMINAL BLOCKS FOR LOOSE CONNECTIONS, CRACKS AND BREAKS. PAR. 28a(13) | |
| 28 | CHECK SETTINGS OF ADJUSTABLE RELAYS. | |
| (29) | LUBRICATE EQUIPMENT IN ACCORDANCE WITH APPLICABLE DEPARTMENT OF THE ARMY LUBRICATION ORDER. PAR. 28b(7) | |
| 30 | INSPECT GENERATORS, AMPLIDYNES, DYNAMOTORS, FOR BRUSH WEAR, SPRING TENSION, ARCING, AND FITTING OF COMMUTATOR. | |
| 31 | CLEAN AND TIGHTEN CONNECTIONS AND MOUNTINGS FOR TRANSFORMERS, CHOKES, POTENTIOMETERS, AND RHEOSTATS. | |
| (32) | INSPECT TRANSFORMERS, CHOKES, POTENTIOMETERS, AND RHEOSTATS FOR OVERHEATING AND OIL-LEAKAGE. PAR. 28b(9) | |
| 33 | BEFORE SHIPPING OR STORING - REMOVE BATTERIES. | |
| 34 | INSPECT CATHODE RAY TUBES FOR BURNT SCREEN SPOTS. | |
| (35) | INSPECT BATTERIES FOR SHORTS AND DEAD CELLS. PAR. 28a(9) | |
| 36 | INSPECT FOR LEAKING WATERPROOF GASKETS, WORN OR LOOSE PARTS. | |
| (37) | MOISTURE AND FUNGIPROOF. PAR. 28b(10) | |
| (38) | IF DEFICIENCIES NOTED ARE NOT CORRECTED DURING INSPECTION, INDICATE ACTION TAKEN FOR CORRECTION. | |

DA AGO FORM 1 MAY 51 11-239 REPLACES DA AGO FORM 419, 1 DEC 50, WHICH IS OBSOLETE. c9—16—64362-1

TM 867-30

*Figure 7. DA AGO Form 11–239.*

*a. External Preventive Maintenance.*

(1) Check for the completeness and satisfactory condition of the radio receiver and its mounting (fig. 1).

(2) Check the suitability of the location and installation site for normal radio operation (par. 10).

(3) Clean the dirt and moisture from the headset, jack (J1), plugs, receiver cabinet, shock mount rails, trunk clamps, and meter and dial windows.

(4) Inspect the seating of cable plugs and connectors, and fuses.

(5) Inspect the control knobs, tuning wheel, and band switch for positive action, scraping, and binding.

(6) Check all toggle switches for positive action.

(7) Tighten the shock mount, shock mount rails, and cabinet screws.

(8) With all power removed; tighten all cord connections.

(9) Inspect storage and dry batteries for dirt, corrosion, and external damage. Inspect the storage batteries for shorts, dead cells, electrolyte level, and specific gravity.

(10) Check the receiver for normal operation.

(11) Inspect the meter for damaged glass.

(12) Inspect the shock mount and exposed metal surfaces for rust and corrosion.

(13) Inspect the terminal board on the rear of the chassis for loose or shorted connections.

*b. Internal Preventive Maintenance.*

(1) Inspect jack J1, electrical transformers capacitors, pilot lamp assemblies, and meter for looseness.

(2) Inspect electron tubes for loose envelopes, loose cap connectors, cracked vacuum tube sockets, and insufficient socket spring tension.

(3) Inspect fixed capacitors for leaks, bulges, and discoloration.

(4) Inspect variable capacitors for dirt, moisture, misalinement of plates, and corrosion.

(5) Inspect resistors for blistering, cracks, and discoloration.

(6) Remove any dirt or foreign material from the chassis.

(7) Lubricate the equipment in accordance with instructions in paragraphs 29 and 30.

(8) Inspect all soldered connections.

(9) Inspect transformers, chokes, and affiliated filtering capacitors for overheating.

(10) Inspect moistureproofing and fungiproofing for cracks.

(11) Clean and tighten the shock mounts, receiver case, and cable connections.

(12) Inspect the terminals of large fixed capacitors for corrosion and dirt.

## Section III. LUBRICATION

### 29. General

The lubrication requirements for Radio Receiver BC–787–(*) are minimum. It is only necessary to cover the gear drive with a small amount of grease. Do this in accordance with Ordnance specification No. AXS–637.

### 30. Procedure

*a.* Remove the old grease from the gear drive with a lint-free cloth moistened with carbon tetrachloride or solvent (SD). *Do not use gasoline as a cleaning fluid for any purpose.*

*b.* Apply the new grease with an orange stick. Do not use an excessive amount of grease. It may drip to the chassis and become a dust and dirt collector.

## Section IV. WEATHERPROOFING

### 31. Weatherproofing

*a. General.* When equipment is operated under severe climatic conditions such as prevail in tropical, arctic, and desert regions, special treatment and maintenance are required. Fungus growth, insects, dust, corrosion, salt spray, excessive moisture, and extreme temperatures are harmful to most materials.

*b. Tropical Maintenance.* A special moistureproofing and fungiproofing treatment has been devised which, if properly applied, provides a reasonable degree of protection. This treatment is explained in TB SIG 13 and TB SIG 72.

*c. Winter Maintenance.* Special precautions are necessary to prevent poor performance or total operational failure of equipment in extremely low temperatures. These precautions are explained in TB SIG 66 and TB SIG 219.

*d. Desert Maintenance.* Special precautions necessary to prevent equipment failure in areas subject to extremely high temperatures, low humidity, and excessive sand and dust, are explained in TB SIG 75.

*e. Lubrication.* The effects of extreme cold and heat on materials and lubricants are explained in TB SIG 69. Pay strict attention to all lubrication orders when operating equipment under conditions of extreme cold or heat. Refer to paragraphs 29 and 30 for detailed instructions.

### 32. Rustproofing and Painting

*a.* Touch up a badly scarred or damaged front panel so that its bared surface will not corrode. Clean the panel down to the bare metal with No. 00 or No. 000 sandpaper; obtain a smooth, clean metallic finish.

***Caution:*** Do not use steel wool. Minute particles frequently enter the receiver and cause harmful internal shorting or grounding of circuits.

*b.* Remove any rust or corrosion from the metal surface with solvent (SD). In some severe cases, use solvent (SD) to soften the rust, and use No. 00 or No. 000 sandpaper before painting the metal. Apply the touch-up paint with a small brush. Paint used will be authorized and consistent with existing regulations.

## Section V. TROUBLE SHOOTING AT ORGANIZATIONAL MAINTENANCE LEVEL

### 33. Scope

*a.* The trouble shooting and repair work that can be performed at the organizational maintenance level (operators and repairmen) necessarily is limited in scope by the tools, test equipment, and replaceable parts issued, and by the existing tactical situation. Accordingly, trouble shooting is based on the performance of the equipment and the use of the senses in determining such troubles as burned-out tubes, cracked insulators, etc.

*b.* The paragraphs which follow in this section contain information that will help in determining which stage is defective and in localizing the fault in that stage to the defective item, such as a tube or fuse.

### 34. Visual Inspection

*a.* Equipment troubles may be caused by one or more of the following conditions:

(1) Loose or unconnected power cable.
(2) Worn, broken, or disconnected cable plugs.
(3) Burned-out fuse or fuses.
(4) Shorted antenna input.
(5) Defective tubes.

*b.* When a failure is encountered, and the cause is not immediately apparent, check as many of the above items as is practicable before starting a detailed examination of the component parts of the receiver. If possible, obtain information from the operator of the equipment regarding performance at the time the trouble occurred.

*c.* Check anything that seems to have an abnormal color which may have been caused by overheating or corrosion.

### 35. Trouble Shooting by Using Equipment Performance Checklist

*a. General.* The equipment performance checklist (par. 36) will help the operator to locate trouble in the equipment. The list indicates the item to be checked, the normal indications of correct operation, and the corrective measures the operator may take. *To use this list, follow the items in numerical sequence.*

*b. Action or Condition.* For some items, the information given in the action or condition column consists of various switch and control settings under which the item is to be checked. For other items, it represents an action that must be taken to check the normal indication as shown in the normal indications column.

*c. Normal Indications.* The normal indications listed include the visible and audible signs that the operator should perceive when he checks the items. If the indications are not normal, the operator should apply the recommended corrective measures.

*d. Corrective Measures.* The corrective measures are those the operator can make without turning in the equipment for repairs. Reference in the table to chapter 5 indicates that the trouble cannot be corrected during operation by the operator, and that trouble shooting by an experienced repairman

is necessary. If the set is completely inoperative, or if the recommended corrective measures do not yield results, trouble shooting is necessary. However, if the tactical situation requires that communications be maintained, and if the set is not completely inoperative, the operator must maintain the set in operation as long as it is possible to do so.

## 36. Equipment Performance Checklist

| | Item No. | Item | Action or condition | Normal indications | Corrective measures |
|---|---|---|---|---|---|
| PREPARATORY | 1 | Antenna | Lead-in wire or wires connected. | | |
| | 2 | Loudspeaker | Speaker cord connected to speaker terminal board TS1 at rear of set. | | |
| | 3 | Line cord | Line cord PL1 connected to power source. | | |
| | 4 | SEND-REC switch | Set at REC. position. | | |
| | 5 | A.N.L. switch | Set at OFF position. | | |
| | 6 | R.F. GAIN dial | Turn right until switch SW3 snaps on. | | |
| | 7 | B F.O. switch | Set at OFF position. | | |
| | 8 | PITCH CONTROL | Set at 0. | | |
| | 9 | SELECTIVITY switch | Set at A.C. OFF position. | | |
| | 10 | A.F. GAIN dial | Set at position 4. | | |
| | 11 | A.M.-F.M. switch | Set at A.M. position. | | |
| START | 12 | SELECTIVITY dial | Turn clockwise to SHARP position. | Dial lamps light | Check fuse FS1 on front panel of B model or FS1 and FS2 on rear of chassis on C model. |
| | | | | Rushing noise or signal heard in speaker. | Check line cord connections.<br>Check tubes in receiver. |
| EQUIPMENT PERFORMANCE | 13 | TUNING | Set the BAND SWITCH at desired frequency band. Tune across entire band by rotating TUNING wheel. | Signals heard in loudspeaker. | Check antenna connections. |
| | | | | S meter indicates carrier strength of the received signal. | Check tubes. |
| | 14 | ANTENNA control | Adjust for maximum reading on S meter. | Signal strength will vary with adjustment. | Refer to ch. 5. |
| | 15 | BAND SWITCH | Check each of the tuning ranges.<br>Use procedure given in steps 13 and 14 above. | S meter will indicate a reading when tuning controls are adjusted properly. | Refer to ch. 5. |
| | 16 | PHONES jack | Insert phone plug into PHONES jack. | Signals heard in loudspeaker are audible in phones. | Check phones, cord, and plug. |
| | 17 | R.F. GAIN control | Rotate the R.F. GAIN control in either direction. | Strength of signal increases or decreases. | Refer to ch. 5. |
| | 18 | A.F. GAIN control | Rotate control clockwise | Strength of signal increases. | Refer to ch. 5. |
| | 19 | SEND-REC. switch | Operate to SEND position. (When check is completed, return to REC position.) | No sound is heard in loudspeaker or in phones. | Refer to ch. 5. |
| | 20 | SELECTIVITY control | Tune receiver to a modulated signal and then ro- | The tuning is broader a d the h-f response (audio) | Refer to ch. 5. |

| | Item No. | Item | Action or condition | Normal indications | Corrective measures |
|---|---|---|---|---|---|
| | | | tate SELECTIVITY control from SHARP to BROAD positions. | increases. | |
| | 21 | A.N.L. switch | Turn switch to ON position. | Noise peaks are reduced in amplitude. | Refer to ch. 5. |
| | 22 | B.F.O. switch | Operate the switch to ON position. | Beat-frequency audio signal is heard in loudspeaker or phones. | Check bfo tube V14. |
| | 23 | Bfo PITCH CONTROL | Rotate the bfo PITCH CONTROL on either side of 0. | A change in the pitch of the c-w signal is noted. | Refer to ch. 5. |
| STOP | 24 | SELECTIVITY control | Turn counterclockwise to A.C. OFF position. | Dial lamps go out. No noise or signals are heard in loudspeaker. | |

# CHAPTER 4

# THEORY

## 37. Introduction

*a.* This chapter will aid the serviceman in understanding the functioning of circuits which may be slightly unconventional, or appear complex in the complete schematic. With this knowledge, trouble shooting will be made easier and the work will be done more efficiently.

*b.* Radio Receiver BC–787–(*) is of the superheterodyne type. It has a frequency range of 27.8 to 143 mc in three bands. It is designed for the reception of either a-m, f-m, or c-w signals. Stand-by operation of the receiver can be controlled from a remote point. The receiver may be operated from its internal power supply or from external *A* and *B* batteries.

*c.* An output terminal strip is included, to which one or more external speakers may be connected. There is also a jack (J1) for plugging phones into the output. Neither headphones nor speakers are included with the basic equipment.

*d.* For a-m reception, this receiver uses one stage of r-f amplification, a converter stage, a h-f oscillator, three stages of i-f amplification, second detector, an a-f (audio-frequency) voltage amplifier, push-pull a-f power amplifier, signal-level indicator, avc (automatic volume control) circuit, and automatic noise limiter circuit.

*e.* For f-m reception, it uses the following: one stage of tuned r-f amplification, a converter stage, an h-f oscillator, two stages of i-f amplification, a limiter, a discriminator, a-f voltage amplifier, push-pull a-f power amplifier, and a tuning meter.

## 38. Block Diagram

*a.* The signal path through Radio Receiver BC–787–(*) is shown in the block diagram (fig. 8). This diagram should be studied with view to the sequence of stages through which the incoming signal passes before it reaches the output terminals.

*b.* For a-m reception, the incoming signal passes through antenna transformer T3 to r-f amplifier tube V1. From tube V1, the signal goes to the converter and mixer tube (V2). There it is combined with the signal from the h-f oscillator (V15). The h-f oscillator frequency is always 5.25 mc higher or lower than the incoming signal frequency. Therefore, the output of mixer V2 (the result of the combination of signal frequencies) contains a 5.25-mc i-f signal. This signal goes to the grid of the first i-f amplifier (V3) and is amplified. From there it passes to the second and third i-f amplifiers V4 and V5 and, in each stage, the signal is further amplified.

*c.* From tube V5, the amplified signal goes to the audio detector (V6) and is demodulated and fed to tube V9, a push-pull voltage amplifier. The output of V9 is coupled to push-pull output tubes V11 and V12. At this point, the amplified signal has enough power to operate headphones or loudspeakers. The noise limited (one-half of V6) can be switched in between the audio detector and the a-f voltage amplifier (V9) to reduce static pulses or other man-made electrical disturbances.

*d.* Bfo V14 is used for receiving c-w signals. It generates a signal that is combined with the i-f signal at the audio detector, and produces an audio beat note of approximately 1,000 cycles. This signal is amplified by audio amplifiers V9, V11, and V12. The frequency of the bfo (V14) can be varied to give the most effective audio note. It is possible to receive c-w signals only when the receiver controls are set for a-m reception.

*e.* For f-m reception, the signal path up to tube V4 is the same as the signal path for a-m reception. The output of V4 is fed to f-m limiter V7. This tube limits the amplitude variations of the signal. The result is a constant output, over a wide range of input levels, of the signal amplitude. The output of the limiter (V7) goes to the discriminator (V8) and an audio signal is produced. The amplitude of the signals are proportional to the frequency variations of the applied signals. From the output of the discriminator (V8), the signal is fed to a-f voltage amplifier V9, and then to a-f output tubes V11 and V12.

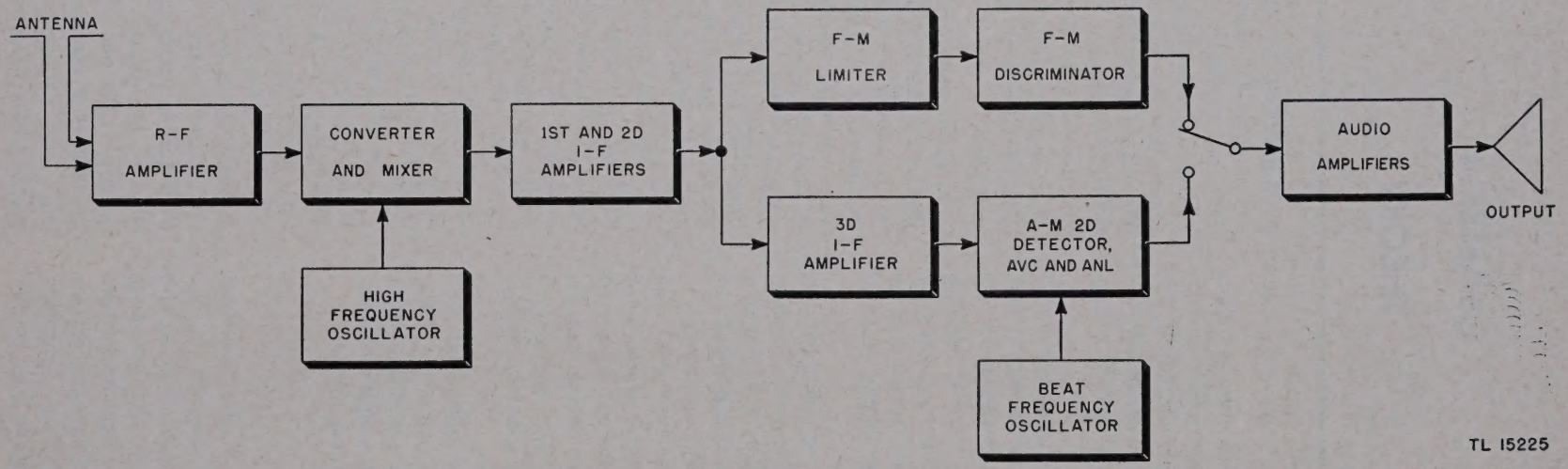


*Figure 8. Radio Receiver BC–787–(*), block diagram.*

## 39. R-f Amplifier
(fig. 9)

Since the electrical functions of bands 1, 2, and 3 are essentially the same, this discussion will describe the circuits with the BAND SWITCH in band 3 position. The r-f amplifier (V1) uses a type 956 acorn remote cutoff pentode tube. Signals present at the antenna are fed to the primary of transformer T3 through a concentric line. The secondary is tuned by ganged TUNING capacitor C1A and ANTENNA trimmer capacitor C2. R-f signals selected by the parallel resonant circuit are applied to the grid of tube V1, and appear in greater amplitude across the primary of transformer T6. Resistor R26 prevents parasitic, or unwanted, oscillations and tends to stabilize the amplifier. Cathode resistor R1, bypassed by capacitor C4, provides self bias. Screen voltage is supplied through resistor R2. R2 and capacitor C5 form a decoupling network. Resistors R3 and R4 and capacitors C6 and C78 comprise the plate load and decoupling network. Capacitor C7 provides a small amount of capacitive coupling to improve response at the h-f end of the band, thus equalizing the r-f signal amplitude over the tunable frequency range.

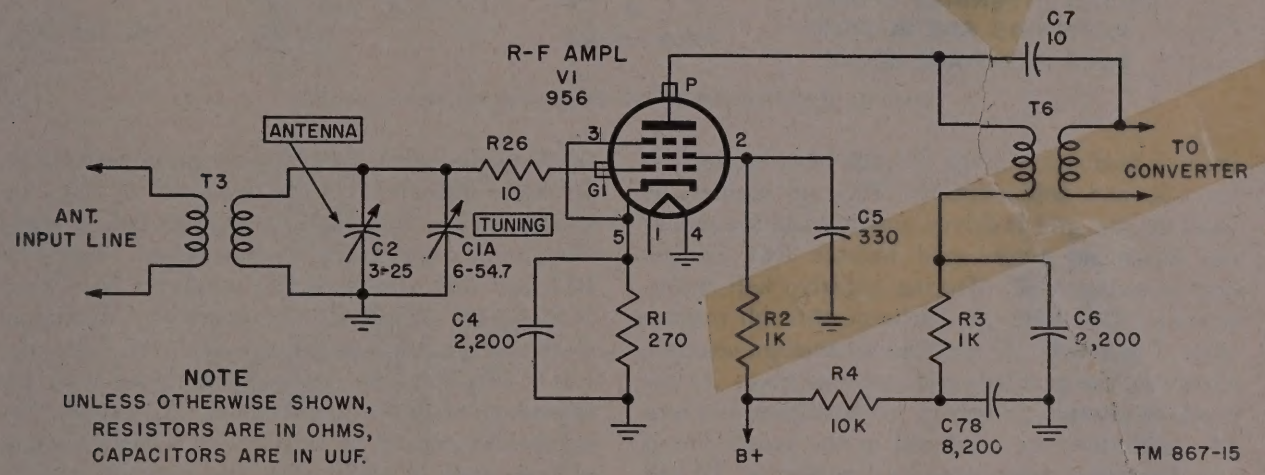


*Figure 9. Radio Receiver BC-787-B, r-f amplifier schematic.*

## 40. Converter and Mixer
(fig. 10)

The converter and mixer stage (V2) utilizes a type 954 acorn pentode tube. In conjunction with its associated circuit components, and the r-f oscillator, it converts the incoming signal to an i-f frequency of 5.25 mc. The r-f stage output is coupled to the mixer input through transformer T6 and coupling capacitor C7. Tuning capacitor C1B, and trimmer capacitor C65, resonates the grid input circuit. Cathode resistor R5 provides self bias. The incoming signal is applied to the control grid of V2, and the h-f oscillator output is applied to the cathode through C9. The heterodyning within the tube produces a third signal at the i-f frequency. This third signal appears across i-f transformer T10. A variable capacitor resonates the primary of transformer T10. Series plate resistor R70 prevents parasitic oscillations. Capacitor C62, in conjunction with resistor R67, forms the plate load decoupling network. Capacitors C10 and C61 and resistor R6 form the screen decoupling network. Dropping resistor R7 supplies the proper screen potential. The converter and mixer output is applied to the first i-f amplifier input through transformer T10.

## 41. H-f Oscillator
(fig. 11)

The h-f oscillator generates an r-f signal 5.25 mc away from the incoming signal. On band 1, this frequency is 5.25 mc higher than the received signal. On bands 2 and 3, it is 5.25 mc lower than the incoming signal. The oscillator utilizes a type 955 acorn triode vacuum tube (V15) in a tuned plate, untuned grid circuit. Resistor R63, r-f choke L1, resistor R62, and capacitor C55 form the plate load decoupling network. When plate voltage is applied, the grid and cathode are at the same potential and plate current increases, result-

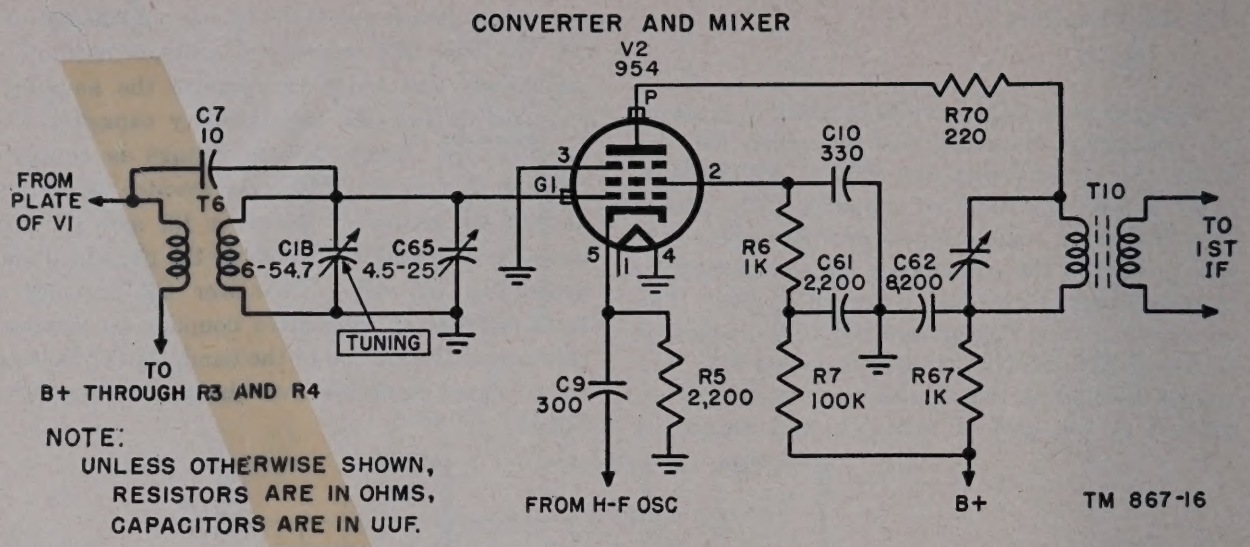


*Figure 10. Radio Receiver BC–787–B, converter and mixer schematic.*

ing in a feedback voltage through blocking capacitor C56 and coil assembly T9. As oscillations build up, the grid is driven positive and the potential developed across grid resistor R64 charges grid capacitor C57. During negative half-cycles, capacitor C57 tends to discharge through resistor R64. Capacitor C57 acquires an average negative charge on the grid side and provides bias. As the triode is alternately driven to saturation and cutoff, oscillations are produced in the tuned circuit at a frequency determined by transformer T9 and tuning capacitors C1C and C11. (Capacitor C11 is not used in Radio Receiver BC–787–B.) Resistor R66 limits the amplitude of oscillations, and thus limits grid current. The r-f voltage induced across the lower coil of assembly T9 is applied to the cathode of converter-mixer tube V2, through capacitor C9.

## 42. First and Second I-f Amplifiers
(figs. 12 and 13)

*a.* The i-f amplifiers select the 5.25-mc mixer output signal and increase its amplitude. The first i-f stage uses a type 6AC7 sharp cutoff r-f pentode vacuum tube. The mixer stage i-f component appearing across the secondary of transformer T10, resonated by a variable capacitor, is applied to the input of tube V3. It appears in greater amplitude across the primary of transformer T11. A variable capacitor resonates the primary of transformer T11. Capacitor C15 and resistor R15 form the plate load decoupling network. Self bias is provided by resistors R17 (in the B model only), R13, and r-f gain control R11. Resistors R13 and R11 are bypassed for rf by capacitor C13. Since R17 is unbypassed, a slight amount of degeneration is introduced. Resistors R17 and R13 also limit the minimum bias when R.F. GAIN control R11 is turned to a maximum clockwise position (resistance removed from circuit). Resistor R9, connected in series with the secondary of input transformer T10, extends the bandwidth slightly by introducing a small amount of resistance in series with the resonant circuit. When the selectivity switch is positioned to include the inductance at the lower end of T10, the bandpass characteristics of T10 are broadened further to facilitate high-fidelity f-m reception. Resistor R10 and capacitor C12 serve as the V3 grid circuit decoupling network. Screen voltage dropping resistor R14 is bypassed for rf by capacitor C14. The output of the first i-f amplifier (V3) is applied to the second i-f amplifier stage (V4), which uses a type 6AB7 pentode tube. Since the circuit components of both i-f stages are nearly the same, the circuit discussion of the first i-f stage is applicable to the second. The i-f signal component appearing across transformer T12 is applied to the f-m limiter stage in the f-m channel and also to the final i-f amplifier in the a-m channel.

*b.* In Radio Receiver BC–787–C, resistor R17 is not used; resistor R13 and capacitor C13 have been connected directly to the cathode of tube V3. Additional cathode resistance (R72) is inserted by SELECTIVITY switch SW7E when the switch is in SHARP position. R15 is part of the plate load. (Refer to figures 12 and 13 for these differences.)

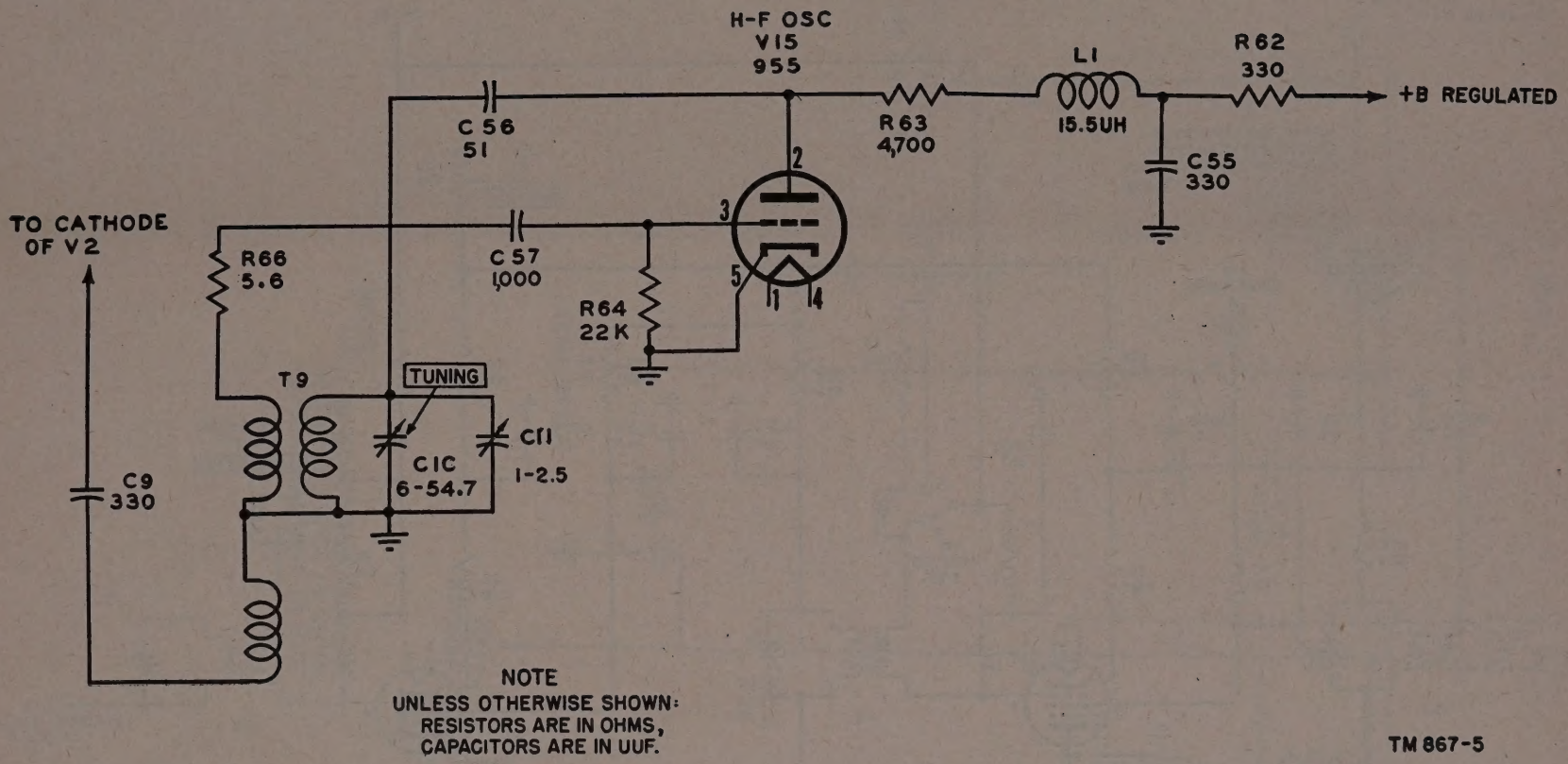


*Figure 11. Radio Receiver BC–787–C, h-f oscillator schematic.*

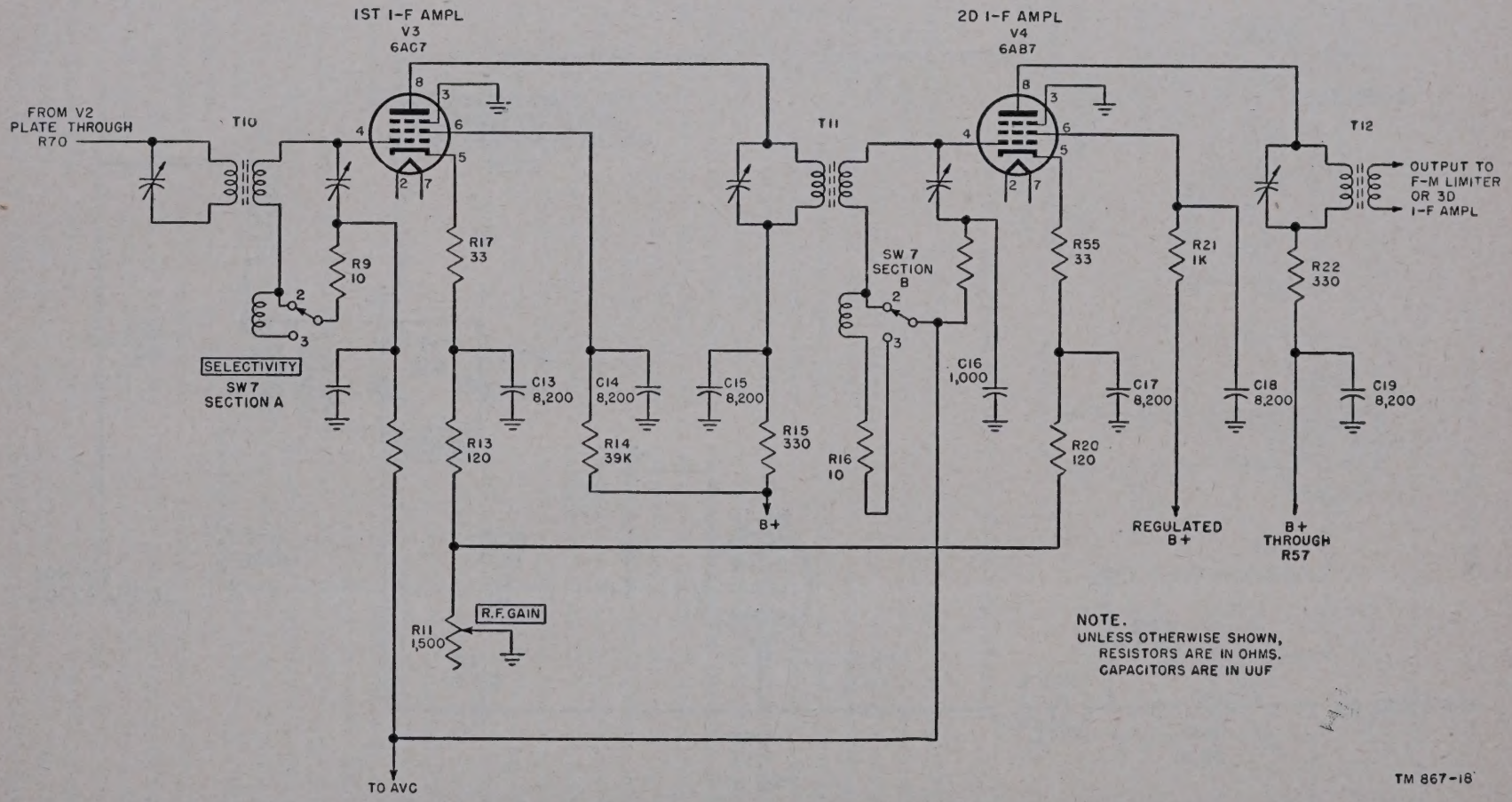


*Figure 12. Radio Receiver BC–787–B, first and second i-f amplifier schematic.*

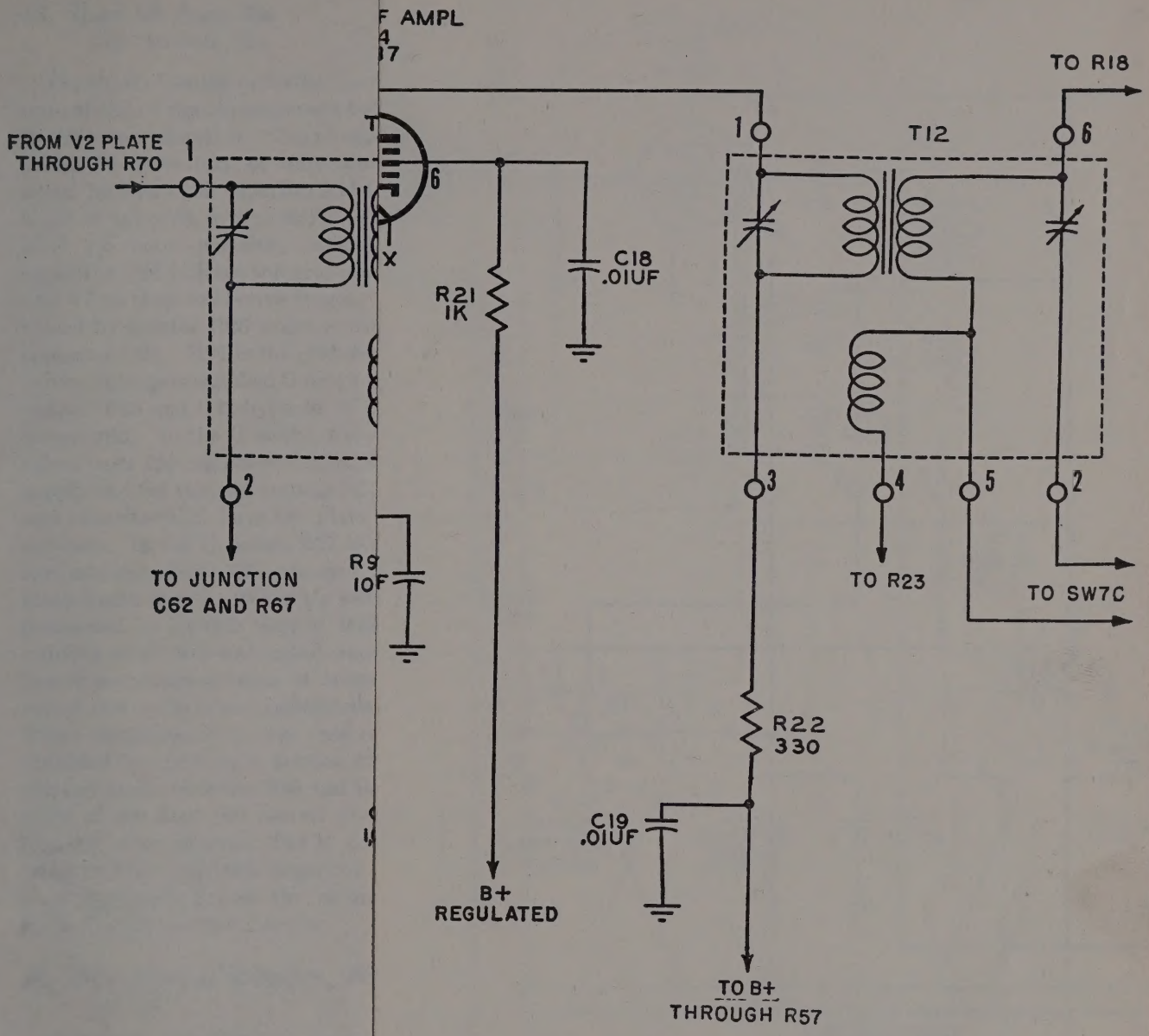


NOTE:
UNLESS OTHERWISE SHOWN,
RESISTORS ARE IN OHMS,
CAPACITORS ARE IN UUF.

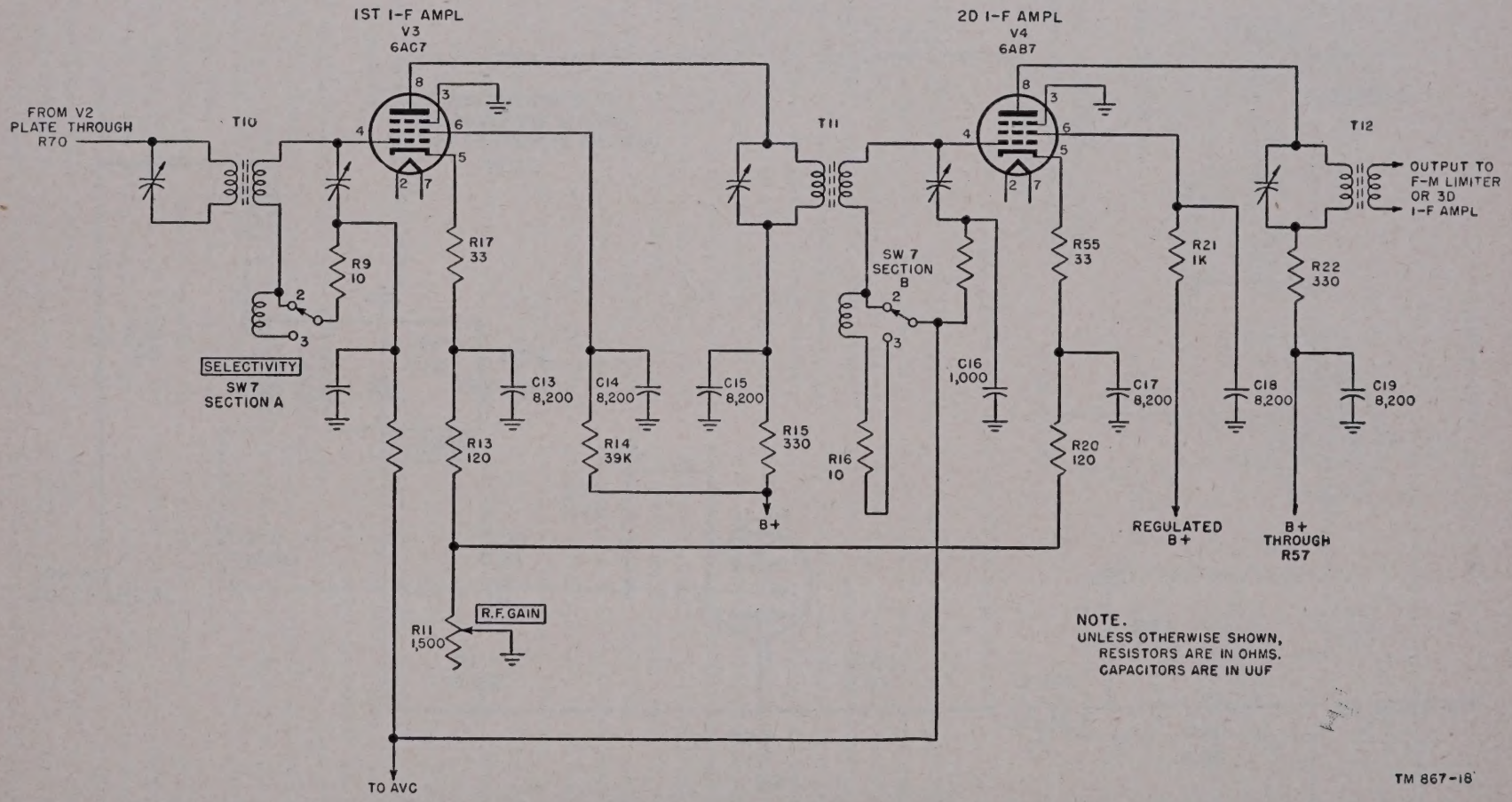


*Figure 12. Radio Receiver BC-787-B, first and second i-f amplifier schematic.*

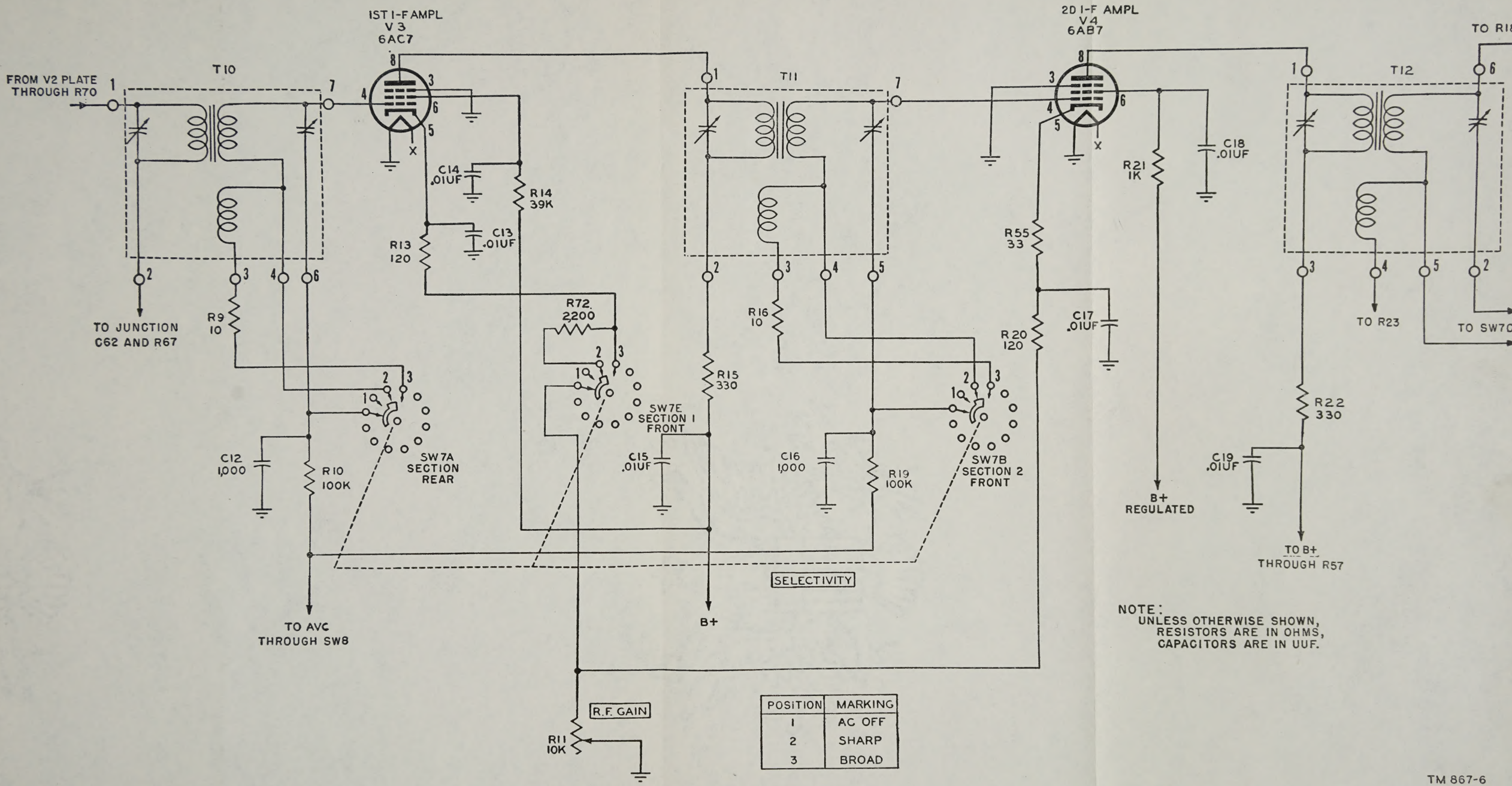


*Figure 13. Radio Receiver BC–787–C, first and second i-f amplifier schematic.*

NOTE:
UNLESS OTHERWISE SHOWN,
RESISTORS ARE IN OHMS,
CAPACITORS ARE IN UUF.

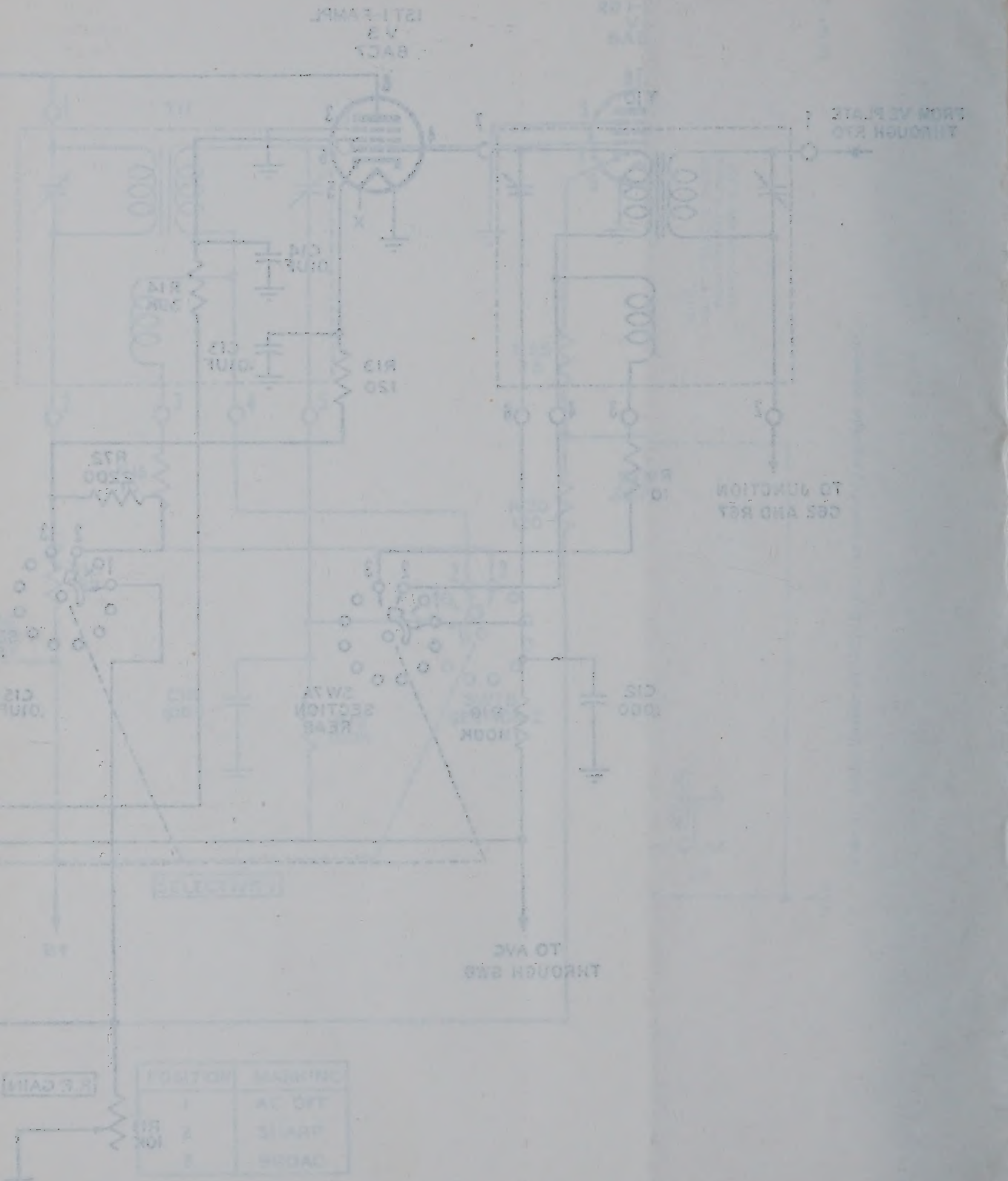

## 43. Third I-f Amplifier
(figs. 14 and 15)

The third i-f amplifier further increases the amplitude of the i-f signal component before it is applied to the second detector. The i-f signal that appears across the secondary of transformer T12 is resonated by a variable capacitor and is applied to the input of tube V5, a type 6SK7 pentode. Resistor R18 prevents parasitic oscillations. Blocking capacitor C20 isolates the grid-bias voltages of V5 and V7 to their respective stages. Tube V5 is self biased by resistor R25 which is bypassed for rf by capacitor C21. R24 is the grid d-c return resistor. Screen voltage is supplied through voltage dropping resistor R28 and C22 bypasses rf appearing on the screen grid. In the C model, the screen voltage is taken from the regulated d-c output of the power supply and fed through resistor R75. Resistor R27 and capacitor C23 form the plate load decoupling network. In the C model, R27 is part of the plate load and capacitor C23 bypasses rf appearing in the plate return circuit. When the selectivity switch is positioned to include resistor R23 and the series inductance at the lower end of transformer T12, the band-pass characteristics of transformer T12 are broadened to facilitate high-fidelity f-m reception. When operating as an f-m receiver, avc action is obtained by applying a portion of the voltage developed across resistors R38 and R39 to the control grids of the first and second i-f amplifiers. The primary of transformer T13 is resonated at the i-f frequency by a variable capacitor. The i-f component appearing across the secondary of T13 is applied to the second detector.

## 44. A-m Second Detector, Avc, and Anl
(fig. 16)

The third i-f amplifier output is applied to the second detector which uses one-half of tube V6, a type 6H6 twin diode. Transformer T13 secondary is resonated to the i.f. by a variable capacitor. The i-f signal is applied across the first half of diode V6. Capacitors C24 and C26, with resistor R31, form an i-f filter network between transformer T13 and diode load resistors R33, R34, and R36. The audio signal voltage, appearing across load resistors R34 and R36, is applied through capacitor C33 (.01 μf in C model) to the audio voltage amplifier. Avc voltage developed in this network is applied to the grids of the first and second i-f amplifiers through a filter network consisting of resistor R35 and capacitor C8 (.01 μf in C model). The second diode section of tube V6 is used as an anl (automatic noise limiter) and functions as follows: Capacitor C25 is charged by the rectified carrier voltage. The time constant of this capacitor and resistor R32 is such that the a-f variations do not alter this charge. However, during a severe noise pulse, the cathode becomes more negative than the charge held by capacitor C25 and current flows. By this action, noise pulses are shorted to ground through V6 (pins 8 and 5) and C25, and do not appear in the output as sudden blasts of noise.

## 45. Beat-Frequency Oscillator
(fig. 17)

The bfo generates a signal approximately 1,000 cycles higher than the i-f frequency. The bfo output is combined with the i-f signal at the second detector. An audio frequency is produced to provide for reception of unmodulated signals. Tube V14, a type 6J5 triode, is used in a modified Hartley circuit. When plate voltage is applied, the grid and cathode are at equal potentials, and the plate current increases; this results in a feedback voltage through capacitor C52 to the lower end of the bfo coil in L5. As oscillations build up, the grid is driven positive. The voltage developed across grid resistor R61 charges the grid coupling capacitor. During negative half-cycles, the grid capacitor tends to discharge through resistor R61. (In the B model, R61 is contained within L5.) The grid coupling capacitor acquires an average negative charge on the grid side and provides bias. As the triode is alternately driven to saturation and cutoff, oscillations are produced in the parallel resonant circuit at a frequency determined by the bfo tank and the tuning capacitor. Variable capacitor C60 varies the oscillator frequency slightly, thus varying the pitch of the note to suit the operator. The oscillator output is applied through a coupling capacitor to the second detector diode plate.

## 46. Audio Amplifiers
(figs. 18 and 19)

*a.* The audio amplifier consists of a push-pull voltage amplifier (V9, a type 6SL7GT twin triode) and a push-pull power amplifier (V11 and V12, type 6V6GT beam power tubes). The audio signal from the a-m detector, or the f-m discriminator, is fed to the control grid of tube V9 (pin 1) through coupling capacitor C33 and A.F. GAIN control R43. Unbypassed cathode resistors R46 and R47 provide self bias. The audio signal amplitude is

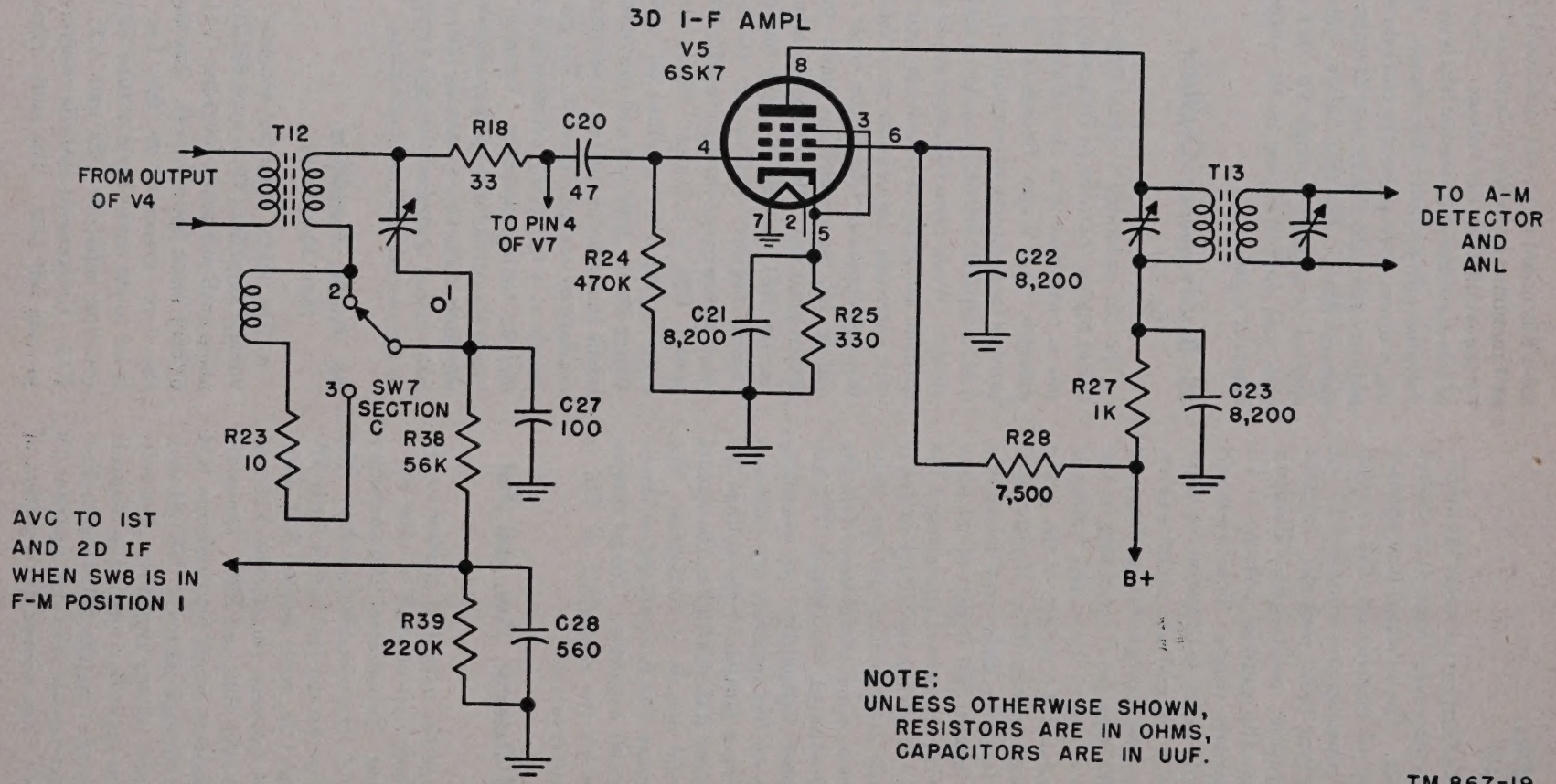


*Figure 14. Radio Receiver BC-787-B, third i-f amplifier schematic.*

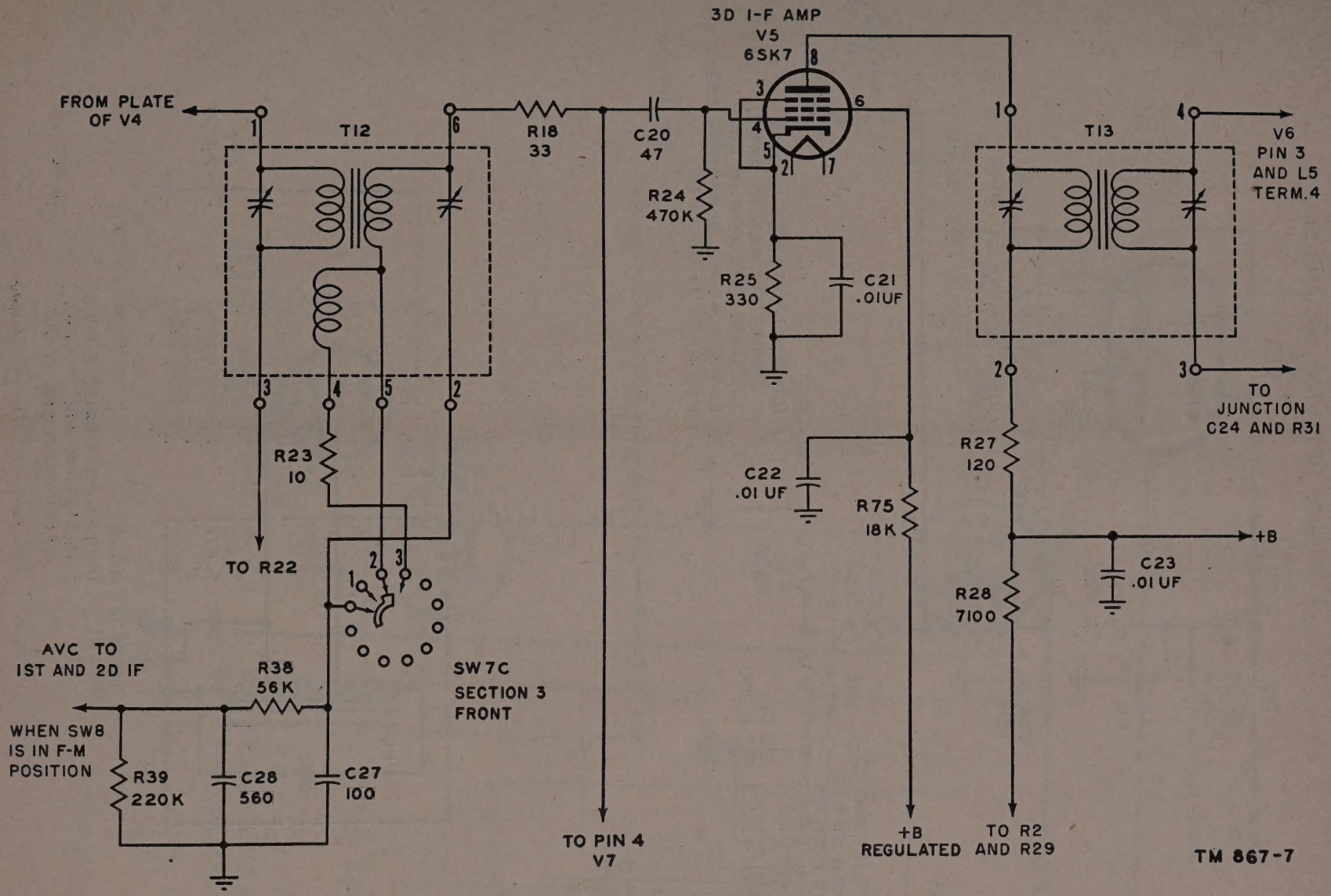


*Figure 15. Radio Receiver BC–787–C, third i-f amplifier schematic.*

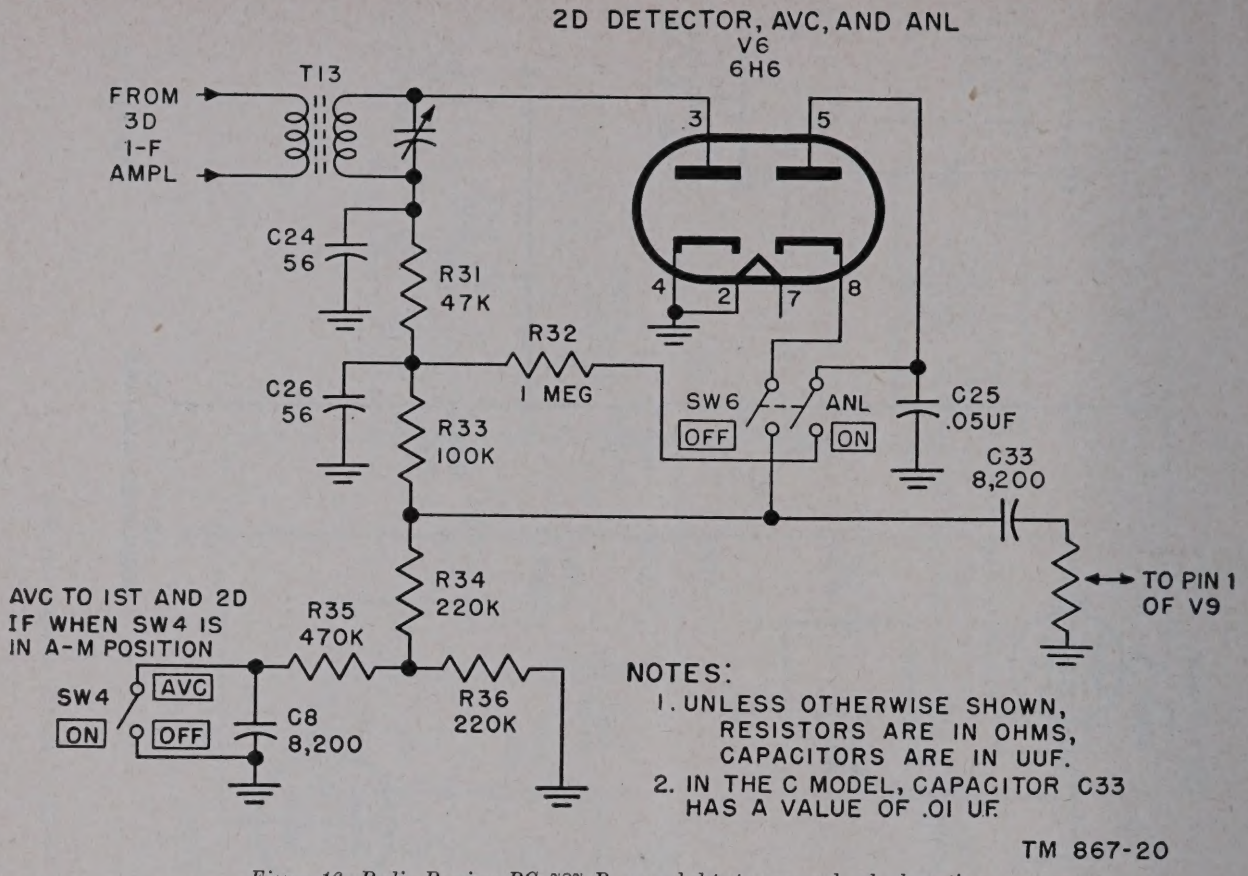


*Figure 16. Radio Receiver BC–787–B, second detector avc and anl schematic.*

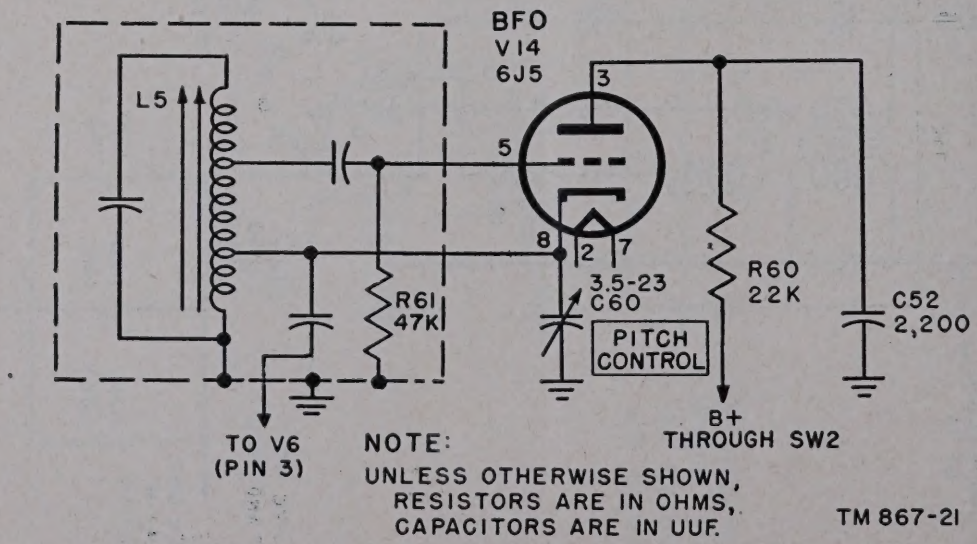


*Figure 17. Radio Receiver BC–787–C, bfo schematic.*

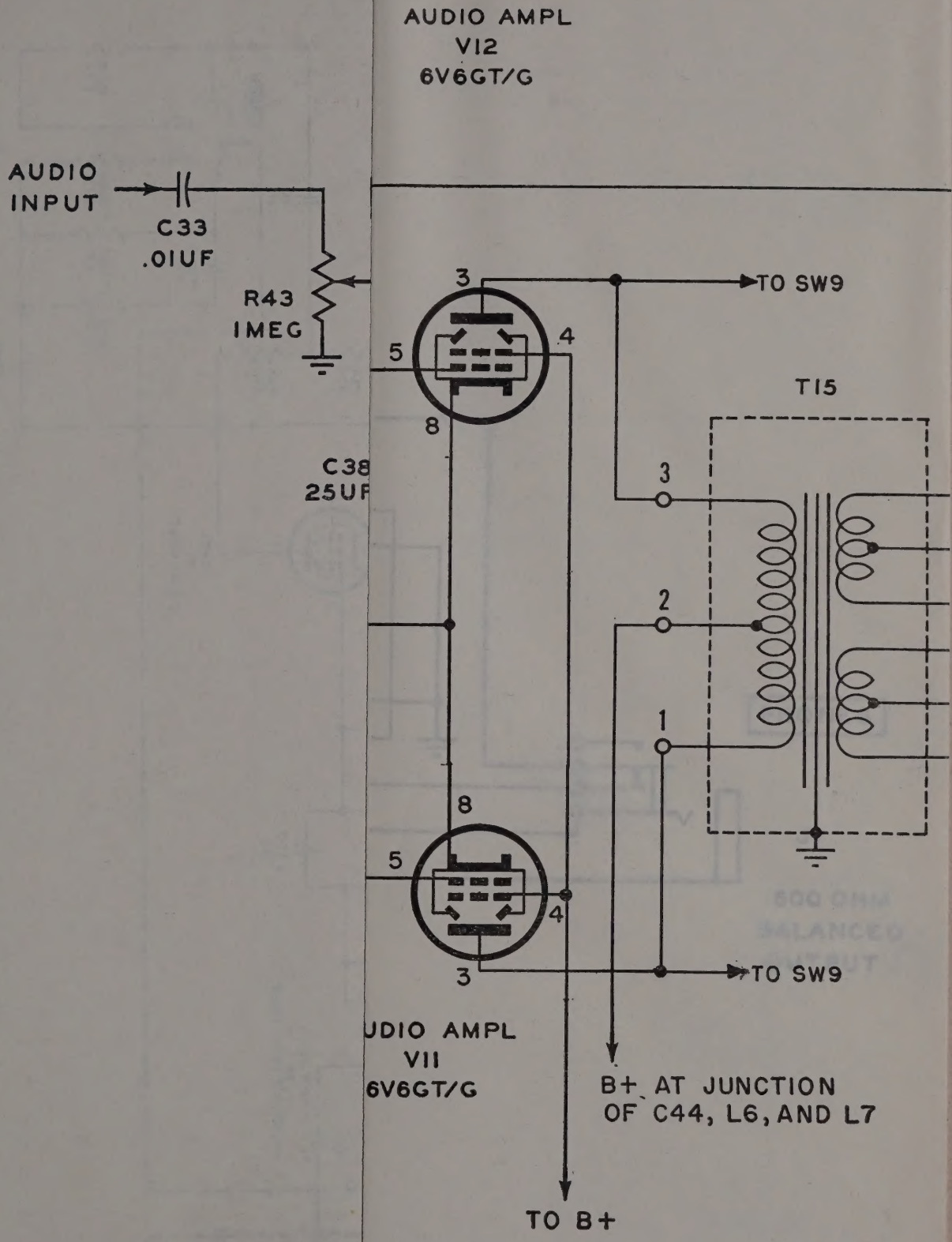


*...per BC-787-C, audio amplifier schematic*

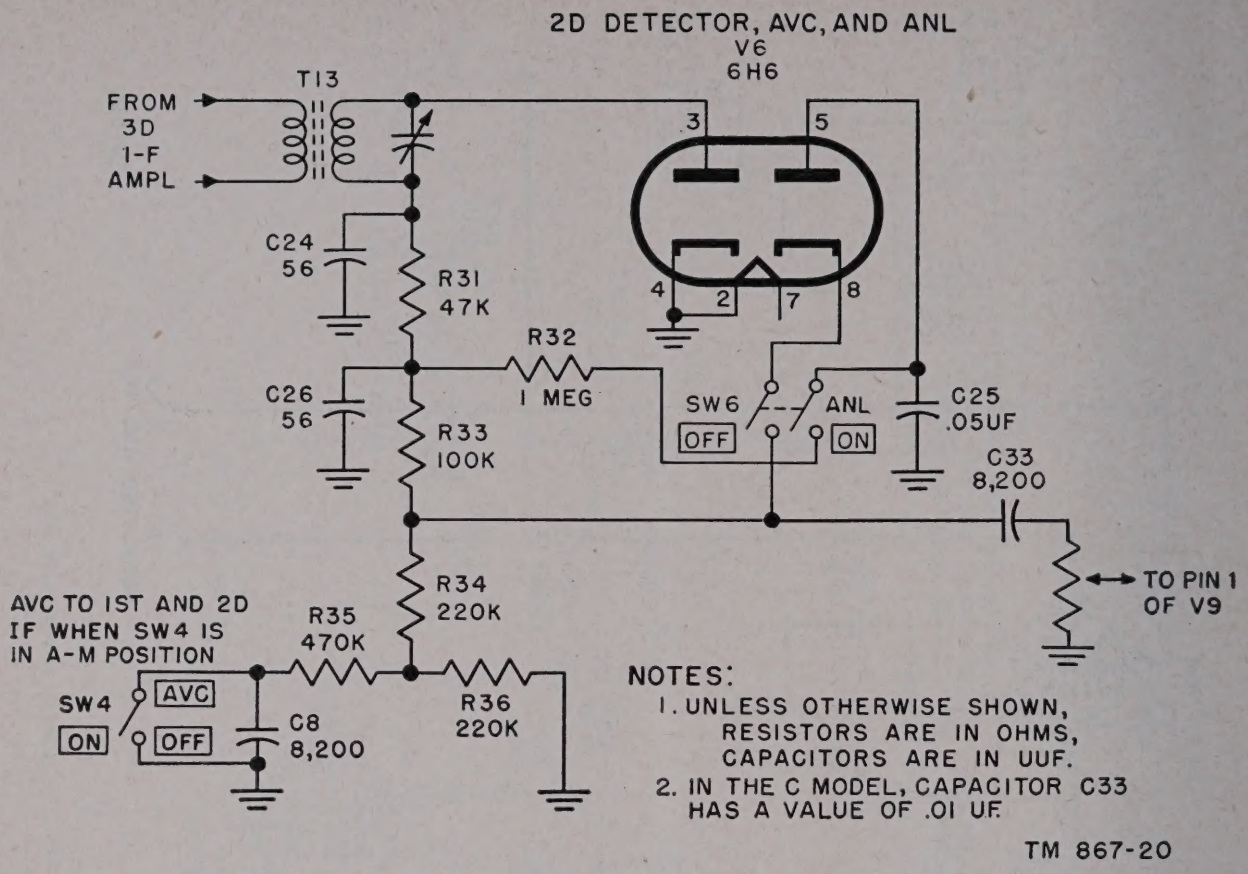


*Figure 16. Radio Receiver BC–787–B, second detector avc and anl schematic.*

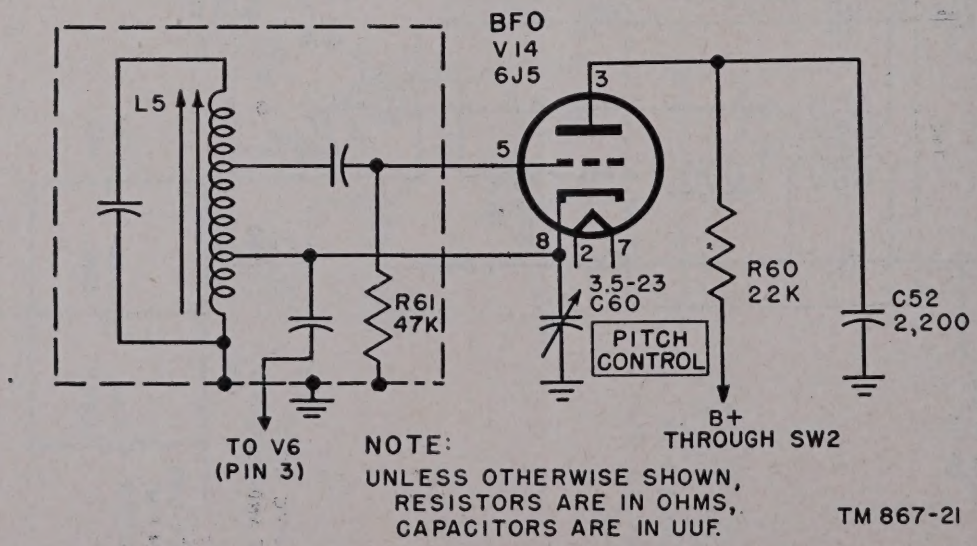


*Figure 17. Radio Receiver BC–787–C, bfo schematic.*

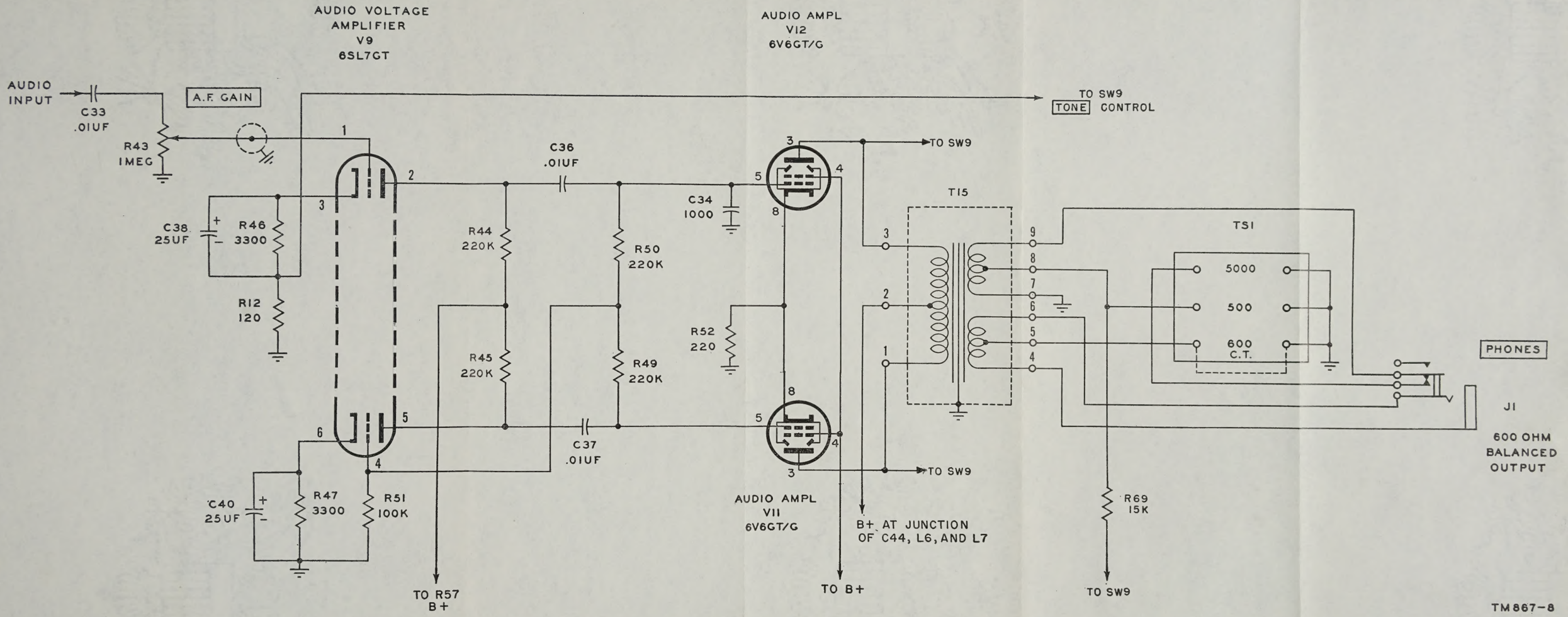


*Figure 18. Radio Receiver BC-787-C, audio amplifier schematic*

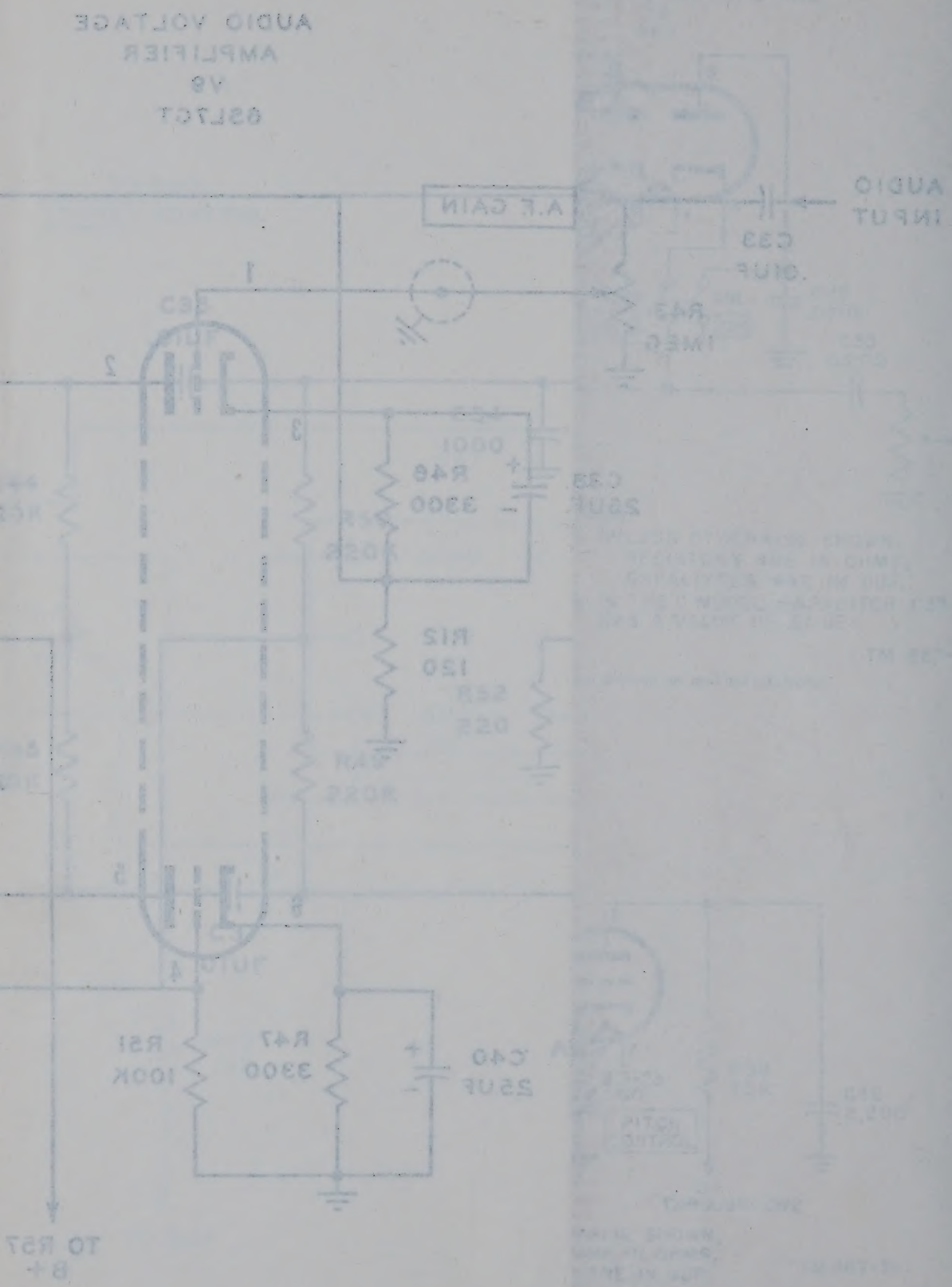
AUDIO VOLTAGE
AMPLIFIER
V9
6SL7GT
A.F. GAIN
AUDIO
INPUT
C33
.01UF
R43
1MEG
R46
3300
C38
25UF
R12
120
R51
100K
R47
3300
C40
25UF
TO R57
B+

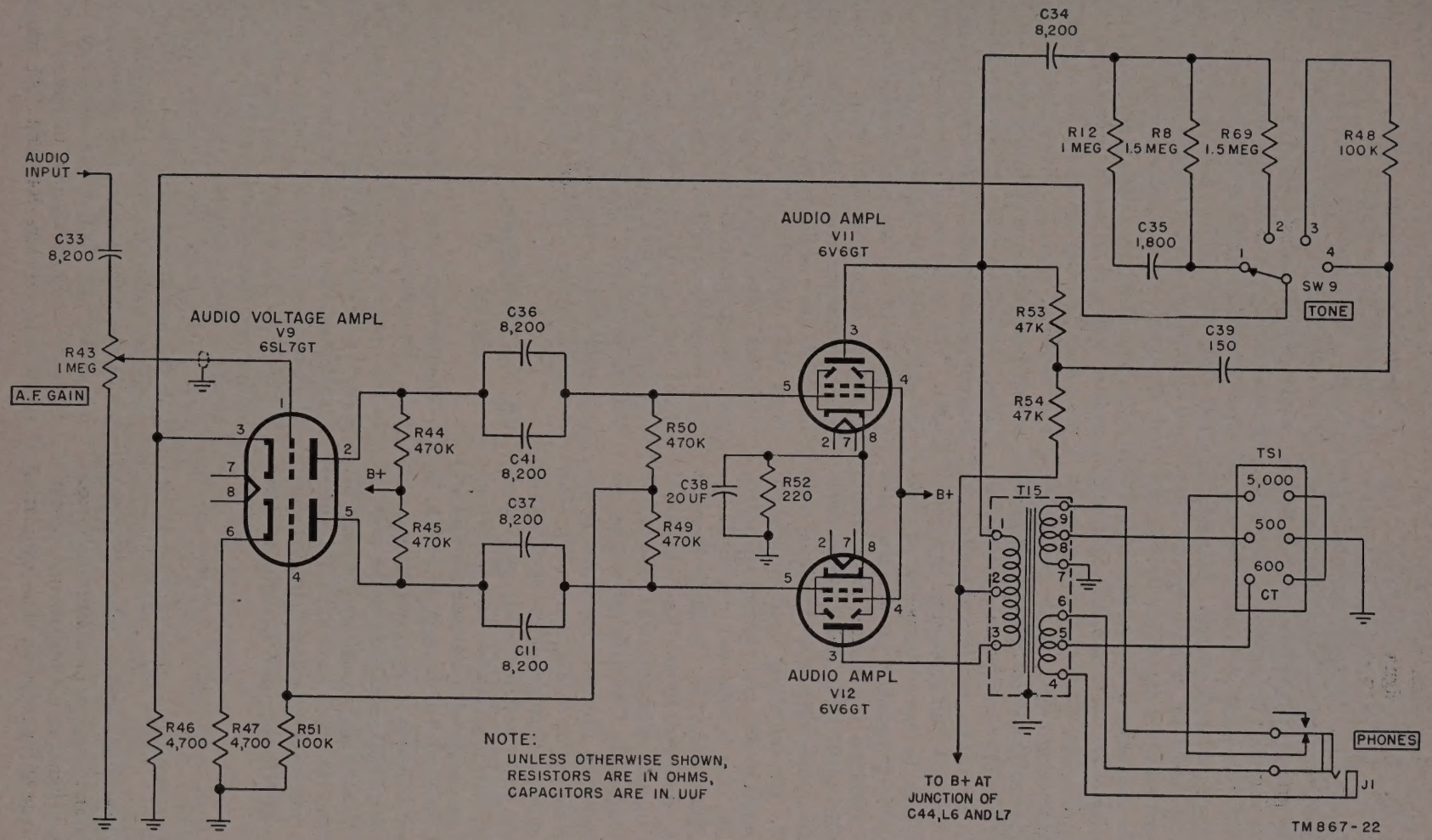


*Figure 19. Radio Receiver BC–787–B, audio amplifier and tone control, schematic diagram.*

greater across plate load resistors R44 and R45. In the B model (fig. 19), the signal is coupled to the control grids of V11 and V12 through capacitors C36, C41, C37, and C11. The other control grid of tube V9 (pin 4) receives its input signal across resistor R51 and grid load resistors R49 and R50. Since the a-f signal applied to one-half of V9 is 180° out of phase with that applied to the other half, the grids of V9 are push-pull excited. Tubes V11 and V12 are self-biased by cathode resistor R52 which is bypassed for af by capacitor C38. In the C model, R52 is unbypassed. In the B model, the network consisting of R8, R12, R48, R53, R54, and R69, together with C34, C35, and C39 provides degeneration in varying degrees in the audio amplifier for tone control from bass boost to h-f cutoff. Output transformer T15 secondary has two tapped windings which terminate on terminal board TS1 and jack J1. The 500- and 5,000-ohm impedance outputs may be used to feed a loudspeaker or a line terminated in a like impedance. In addition, connections for a 600-ohm impedance line is made available by utilizing PHONES jack J1 on the front panel (both sides of this winding are insulated from chassis ground). By connecting a jumper between the two posts marked 600, on terminal strip TS1, this 600-ohm line may be balanced to ground.

*b.* Refer to figures 20 and 30. In Radio Receiver BC–787–C, cathode (pin 6) resistor R47 is bypassed by capacitor C40, and cathode (pin 3) resistor R46 is bypassed by capacitor C38 with unbypassed resistor R12 completing the cathode-biasing resistance for this triode section of tube V9 (fig. 18). The feedback action in the C model differs from that in the B model in that feedback exists only when TONE switch SW9 is in positions 1 and 2. In position 1 (fig. 20), capacitor C35 and resistor R69 are in series with terminal 8 on transformer T15; in position 2, resistor R69 is alone in the circuit. In the C model, the signal is coupled to the grids of tubes V11 and V12 through capacitors C36 and C37. Resistors R53 and R69, with capacitor C35, control the audio tone from bass boost to h-f cutoff through the medium of TONE switch SW9. Refer to figure 20.

## 47. F-m Limiter
(fig. 21)

The f-m limiter stage utilizes tube V7, a type 6AC7 pentode, and operates as a saturated amplifier. The output signal amplitude remains constant over a wide range of input levels, thus eliminating amplitude variations present in the received signal. Noise disturbances cause very little fm but *do* vary the received carrier amplitude. Any noise impulses present at the input will not be present at the output. The output of the second i-f amplifier is applied through transformer T12. It is returned to ground through a decoupling network which consists of resistors R38 and R39, and capacitors C27 and C28. The grid leak bias voltage developed across R38 and R39 is coupled to the grid circuits of V3 and V4 for avc action during f-m operation. When the selectivity switch is positioned to include resistor R23 and the series inductance, the band-pass characteristics are broadened to facilitate h-f, f-m reception. Since low bias is provided, and plate screen potentials are of a low value (approx. 75 volts), the tube is easily driven to cutoff and plate current saturation by input signals of high amplitude. The above action effectively removes amplitude variations by clipping the positive and negative peaks of the incoming signal that are above and below a predetermined level. This does not affect frequency variations. Plate and screen potentials are supplied from a voltage dividing network that consists of resistors R29 and R30. Capacitor C30 bypasses af appearing on the screen grid. The primary of transformer T14 is resonated by a variable capacitor. Primary and secondary shunt resistors R37 and R71 (in C model only), respectively, broaden the band-pass characteristics of transformer T14. The f-m limiter output signal, appearing across the primary of transformer T14, is applied to the f-m discriminator input.

## 48. F-m Discriminator
(fig. 22)

The f-m discriminator circuit produces audio signals. The amplitude of the signals is proportionsl to the frequency variations of the applied signals. Tube V8, a type 6H6 twin diode, together with transformer T14, form the main circuit components. The limiter stage output is impressed across transformer T14. The primary and secondary of T14 are inductively coupled and tuned to the center frequency of the i-f bandpass by two variable capacitors. The primary also is coupled capacitively by C29 (27 $\mu\mu$f in B model) to the midpoint of the secondary winding. When the applied signals do not vary in frequency, the induced voltages, appearing across each half of the secondary, cause the diodes to conduct equally, in opposite directions, across load resistors R40 and R41 which cancel.

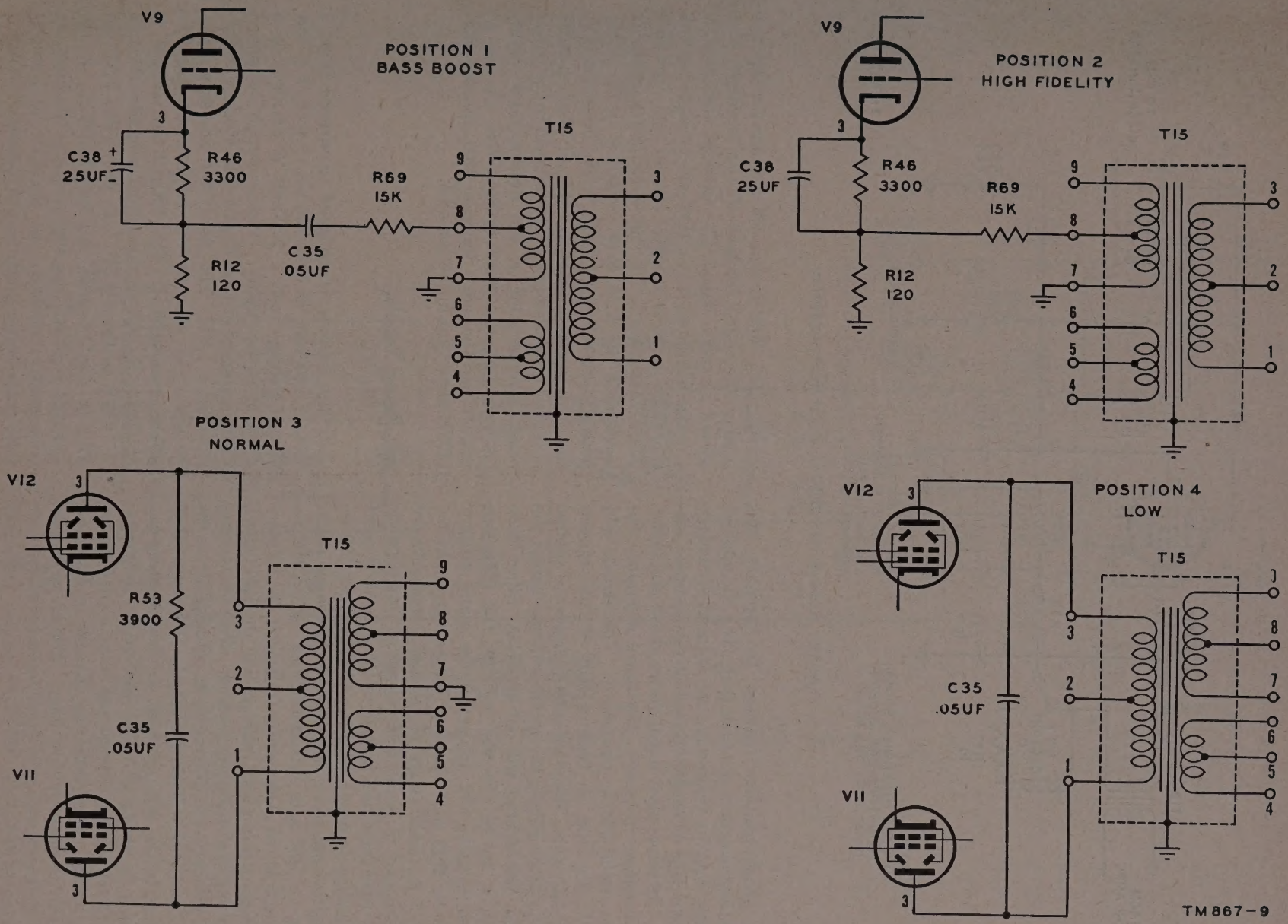


*Figure 20. Radio Receiver BC–787–C, tone control, simplified schematic.*

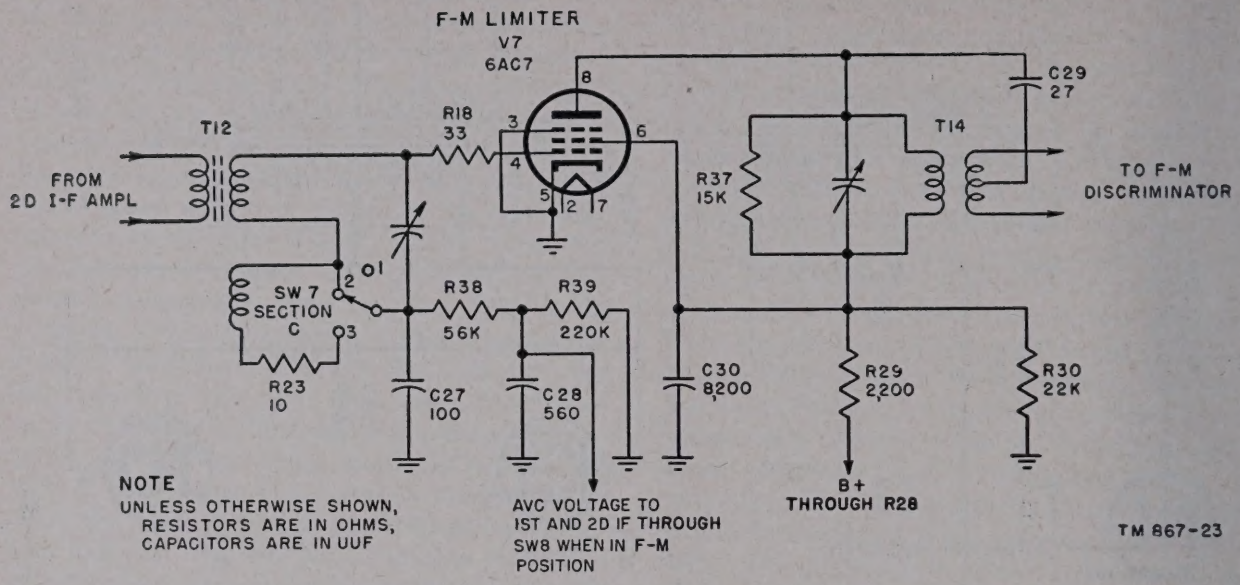


*Figure 21. Radio Receiver BC–787–B, f-m limiter schematic.*

The phase relations between the primary and secondary currents are such that when the applied signals vary in frequency, the induced secondary current lags or leads the capacitively coupled signal. As the applied signal varies above and below the resonant frequency, the tuned secondary becomes inductive or capacitive. The signals add across the top or bottom half of the tapped secondary coil. When unequal voltages are applied to the diode plates, the signal voltages across the diode load resistors will not be equal. Since these voltages are of opposite polarity, the difference between them will appear at the audio output. Resistor R42 and capacitor C32 attenuate the h-f end of the audio range, since these frequencies are emphasized by some transmitters. This network also attenuates interference which may be present at the discriminator output. Meter M1, an 160–0–40 microammeter, is used as a resonance indicator. Resistor R56 acts as a multiplier. When the receiver is tuned to the center frequency, the voltages developed across load resistors R40 and R41 cancel, resulting in a zero meter reading. With the receiver off resonance, the differences in voltages across the load resistors will be indicated. The meter will deflect to the left, or right, as the incoming frequency is above or below the center frequency. When the receiver is operating in the A.M. position, the tuning meter indicates changes in the plate current of the second i-f stage. Maximum current will be drawn with zero signal input because no avc voltage is developed, therefore no bias is present on the tube. The current will decrease through the tube as the signal increases due to increased bias caused by avc voltage. The meter is connected in a bridge circuit so that a decrease in plate current causes an increase in meter current and a greater meter indication. The 160–0–40 meter range is used when the A.M.-F.M. switch is in the F.M. position, and the 0–160 range, when the switch is in the A.M. position. Resistor R71 (in the C model) is across the secondary of T14 to broaden the band-pass characteristics of the discriminator input. Cathode low-pass filter resistor R42 (in the C model) has the same function that resistor R56 (470K ohms) has in the B model.

## 49. Power Supply
(fig. 23)

*a.* The receiver is designed to operate from a 115- or 230-volt, 50/60-cycle ac; or from a 6-volt storage battery and a 270-volt *B* battery; or a vibrator power supply. The a-c supply is applied to the primary of transformer T16 through a low-pass filter LF1. The line filter prevents interference from entering the receiver through the power connections. The filtered a-c supply is applied to the power transformer primaries through AC OFF switch SW7D, fuse FS1 (fuses FS1 and FS2, in the C model), and switch SW10. In the 115-volt position, the two primary windings are connected in parallel. In the 230-volt position, both transformer primaries are connected in series.

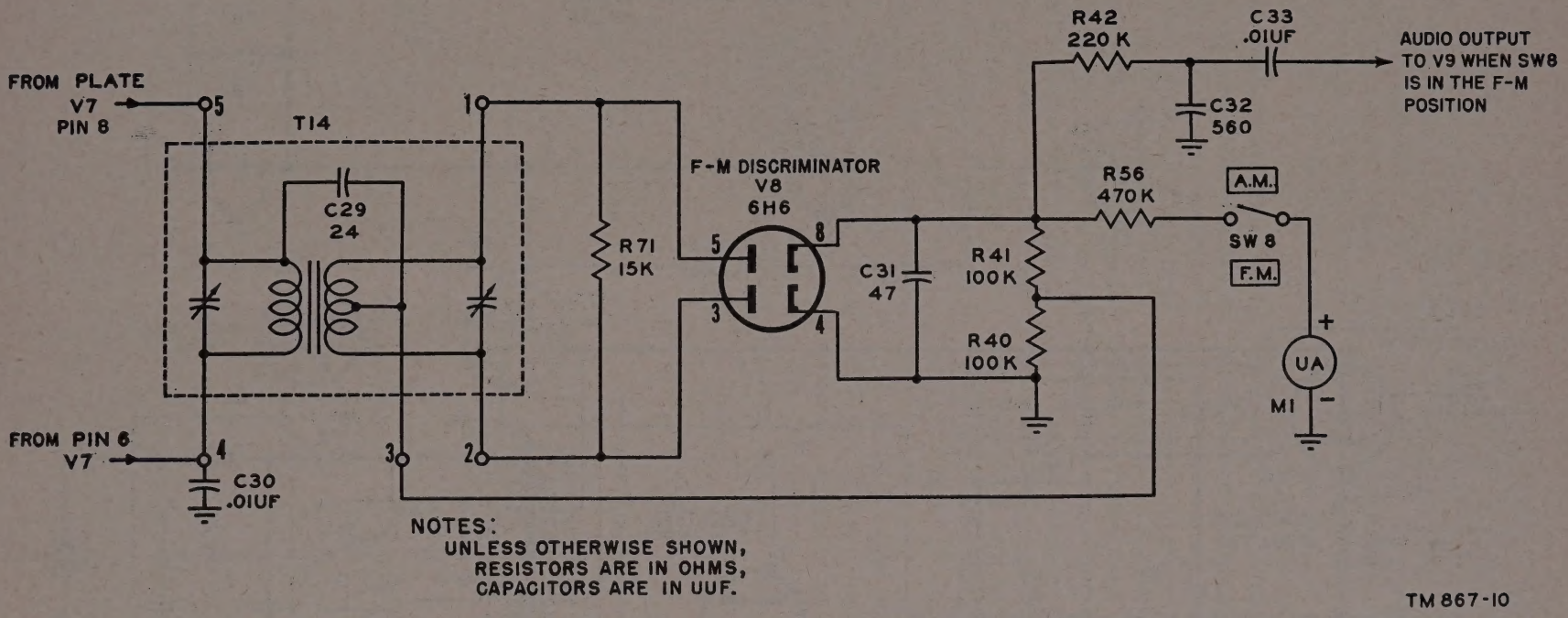


*Figure 22. Radio Receiver BC–787–C, f-m discriminator schematic.*

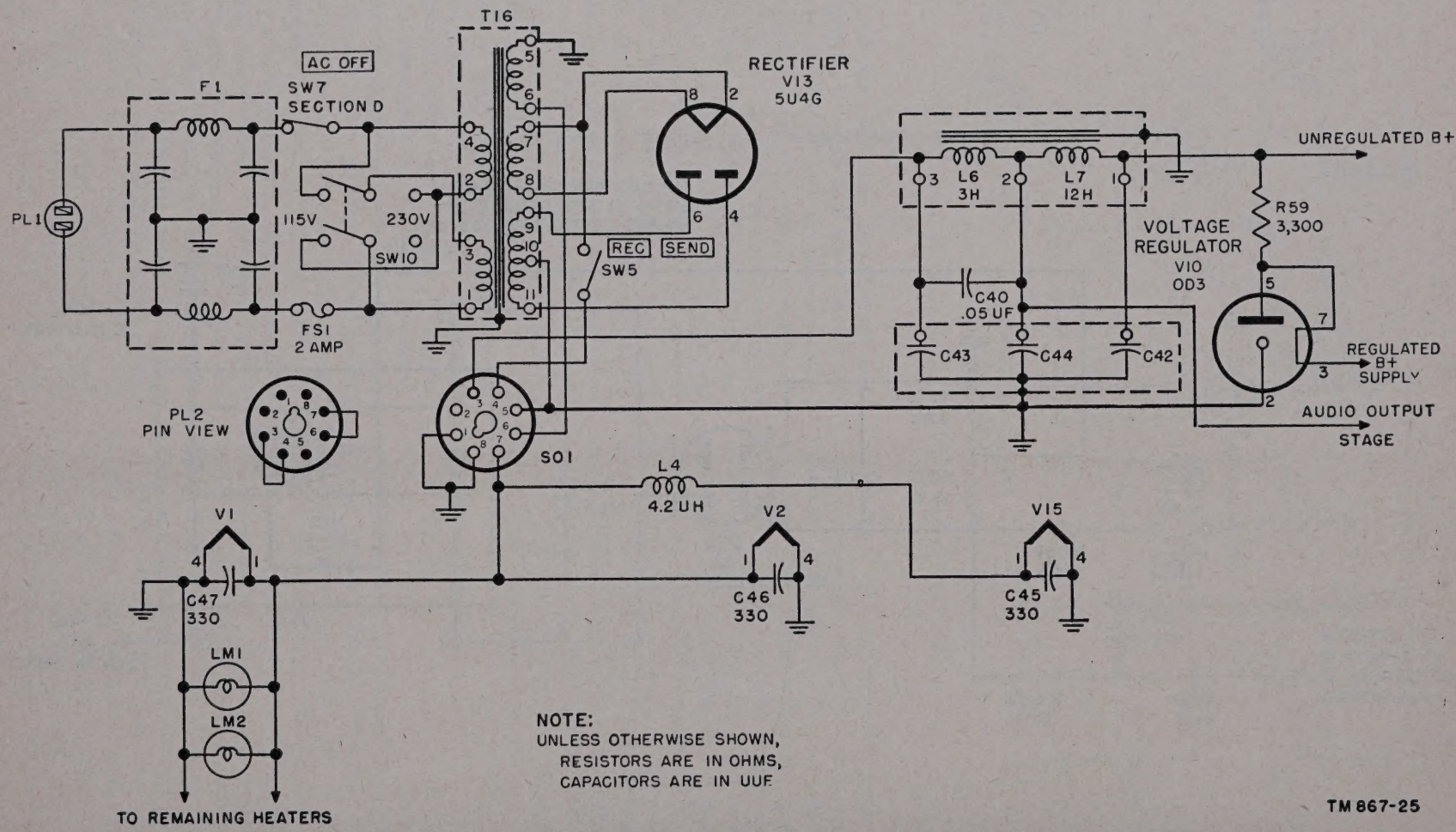


*Figure 23. Radio Receiver BC–787–B, power supply schematic.*

The vacuum-tube heaters and pilot lamps in the receiver are connected in parallel. The filament voltage (6.3 volts ac) is supplied from the top secondary winding of transformer T16. Tubes V1 and V2 have r-f bypass capacitors (C47 and C46) connected across the heaters. Tube V15 has an r-f decoupling network, L4 and C45, connected between its heater and the common heater supply.

*b.* Tube V13, a type 5U4G, full-wave rectifier, receives its high voltage and filament supplies from the lower secondary windings of transformer T16. The pulsating d-c rectifier output voltage is applied to the ripple filter through socket SO 1 and REC-SEND switch SW5. In the a-c operating position, Plug PL-2 (furnished with the equipment) must be plugged into socket SO 1 to provide continuity in the power circuits. The filter network (L6, L7, C42, C43, and C44) removes the ripple from the output voltage of the rectifier tubes before it is applied to the receiver circuits. In the B model, capacitor C40 resonates filter choke L6 at the ripple frequency to provide additional filtering. In the C model, capacitor C83 is added for additional filtering. High voltage for the audio output stage is obtained from the midpoint of the dual chokes L6 and L7. Less filtering is required for this stage, and a higher potential is available at this point. The d-c output voltage from the filter choke supplies the unregulated high-voltage requirements of the receiver. A second output, from the unregulated supply, is applied through resistor R59 to tube V10 (tube type VR–150–30, voltage regulator). Tube V10 functions as a variable resistor. Its current drain is proportional to the potential applied across it. When the voltage drop across resistor R59 increases or decreases, tube V10 will draw more or less current. It will maintain the potential, between the regulated output and ground, at a fixed value. The regulated supply is applied to the r-f oscillator, mixer screen and plate, and the second and third i-f screens.

*c.* For d-c operation, 6 volts at 4.5 amperes, and 270 volts at 145 milliamperes are required. Shorting Plug PL–2 must be removed from socket SO 1. Refer to figure 5 and connect battery wires to spare unwired Plug PL–2; then insert the plug into socket SO 1.

*d.* In the C model (fig. 3), capacitors C42, C43, C44, and C83 are maintained as separate components. In the B model (fig. 4), capacitors C42, C43, and C44 are maintained as a unit, and capacitor C40 as a component.

# CHAPTER 5

# FIELD MAINTENANCE INSTRUCTIONS

*Note.* This chapter contains information for field maintenance. The amount of repair that can be performed by units having field maintenance responsibility is limited only by the tools and test equipment available and by the skill of the repairman.

## Section I. TROUBLE SHOOTING AT FIELD MAINTENANCE LEVEL

***Warning:*** There are certain points in the radio receiver that operate at voltages above 250 volts. These points are located in the vicinity of the power supply section and should not be touched while power is applied to the receiver. Be very careful when handling or testing any part of the receiver while it is connected to the power source

### 50. Trouble-Shooting Procedures

*a. General.* The first step in servicing a defective radio set is to sectionalize the faulty parts. Sectionalization means tracing the fault to the *major component or circuit* responsible for the abnormal operation of the set. The second step is to localize the fault. Localization means tracing the fault to the defective *part* responsible for the abnormal condition. Some faults such as burned-out resistors and shorted transformers often can be located by sight, smell, and hearing. The majority of faults, however, must be localized by *checking voltage and resistance.*

*b. Component Sectionalization.* The tests listed below aid in isolating the source of trouble. To be effective, the procedure should be followed in the order given. Remember that servicing procedure should cause no further damage to the receiver. The service procedure is summarized as follows:

(1) *Visual inspection.* The purpose of visual inspection is to locate any visible trouble. Through this inspection alone, the repairman frequently may discover the trouble or determine the stage in which the trouble exists. This inspection is valuable in avoiding additional damage to the receiver, which might occur through improper servicing methods, and in forestalling future failures.

(2) *Input resistance measurements.* These measurements (par. 57) prevent further damage to the receiver from possible short circuits. Since this test indicates the condition of the filter circuits, its function is more than preventive.

(3) *Trouble-shooting chart.* The trouble symptoms listed in this chart (par. 55) will aid greatly in localizing trouble.

(4) *Intermittents.* In all these tests, the possibility of intermittents should not be overlooked. If present, this type of trouble may be made to appear by tapping or jarring the set. It is possible that the trouble is not in the receiver itself, but in the installation, or trouble may be caused by external conditions. In this event, check the installation, if possible.

### 51. Trouble-Shooting Data

Take advantage of the material supplied in this manual. It will help in the rapid location of faults. Consult the following trouble-shooting data:

| Fig. No. | Title |
|---|---|
| 3 | Radio Receiver BC–787–C, top rear view. |
| 4 | Radio Receiver BC–787–B, top view, r-f shield cover removed. |
| 24 | Radio Receiver BC–787–B, side view of r-f section with shield removed. |
| 25 | Radio Receiver BC–787–C, top view with r-f shield removed. |
| 26 | Radio Receiver BC–787–C, bottom view of chassis. |
| 27 | Radio Receiver BC–787–C, voltage and resistance chart. |
| 28 | Radio Receiver BC–787–B, resistance and voltage chart. |
| 31 | Radio Receiver BC–787–B, schematic circuit diagram. |
| 32 | Radio Receiver BC–787–C, schematic circuit diagram. |

## 52. Test Equipment Required for Trouble Shooting

The test equipment required for trouble shooting Radio Receiver BC–787–(*) is listed in the following chart. The technical manuals associated with the test equipment also are listed.

| Test equipment | Technical manual |
|---|---|
| Signal Generator TS–497A/URR (tunable from 5.25 mc to 140 mc). | TM 11–5030. |
| Nonmetallic screw driver | |
| 100-ohm noninductive resistor for a dummy load. | |
| Output Meter TS–585A/U and TS–585B/U | TM 11–5017. |
| Multimeter TS–352/U | TM 11–5527. |

## 53. General Precautions

Observe the following precautions very carefully when servicing the radio receiver:

*a.* Do not remove the bottom cover of the receiver with the power on; dangerous voltages are exposed.

*b.* Use a dry cloth or tube puller when removing vacuum tubes. This will prevent burning of the fingers and hands.

*c.* When working inside the case of the receiver, do not bend the ganged tuning capacitor plates; this either will cause a short in the tuning capacitor or will change the alinement.

*d.* Do not overtighten screws which are used in plastic materials. The threads in the material may be stripped, or the material may crack.

*e.* When changing a component held by screws or nuts, always replace the lockwashers.

*f.* The equipment may become faulty because of the careless replacement of parts. The following precautions are applicable in most instances:

(1) If the component has several leads, such as a transformer, note the position of the leads, and tag each lead before unsoldering. In doing this, do not damage other leads by pulling or pushing them out of the way.

(2) Do not permit drops of solder to fall into the equipment; they may cause a short circuit.

(3) A carelessly or poorly soldered connection may create a new fault. All joints must be well-soldered. Poorly soldered joints are the most difficult faults to find.

(4) When a part is removed from the r-f or i-f circuits, install the new part in the exact spot from which the faulty part was removed.

(5) In h-f circuits, parts which have the same electrical value but differ in physical size may cause trouble.

(6) Particular attention should be given to grounding the newly placed part. Use the same ground as in the original wiring unless it is defective. Without a good ground, the result may be a decrease in the output of the equipment or oscillations in the circuits.

(7) The METER ZERO adjustment and the alinement adjustments must not be disturbed.

## 54. Checking B+ Circuit for Shorts

*a.* A short circuit in the B+ line will disable the entire receiver. However, at times only one or more stages will be affected. Operation of the receiver with a short circuit may cause other components to overheat because of the increased current flow. Sooner or later those parts will become defective. To check for a B+ short, it is advisable to make a resistance check.

*b.* To trace the circuit to a shorted component, start at the power supply filter capacitors.

(1) Use an ohmmeter. If the ohmmeter indicates only a few hundred ohms, the trouble is probably in the filter capacitors.

(2) By switching SEND-REC switch SW5 on or off, the trouble may be verified further. With the switch in REC. position (closed), the B+ voltage is connected to the plate and screen circuits of the receiver. Use the ohmmeter for a resistance check of the components in these two circuits.

(3) Coupling capacitors become leaky (high-resistance short) and place a positive voltage on the control grid of the following tube. Use the highest resistance scale on the ohmmeter to measure these capacitors.

(4) With the power removed from the receiver, make resistance checks at the vacuum-tube sockets (figs. 27 and 28). When this is completed, apply power to the receiver and check the voltages.

## 55. Trouble-Shooting Chart

The following chart is supplied as an aid in locating trouble in the radio receiver. It lists the symptoms which the repairman should observe when making a few simple tests. After the trouble has been localized to a stage or circuit, a tube check and voltage and resistance measurements of this stage or circuit ordinarily should be sufficient to isolate the defective parts. Normal voltage and resistance measurements are given in figures 27 and 28.

| Symptom | Probable trouble | Correction |
|---|---|---|
| 1. SELECTIVITY-A.C. switch turned on. Receiver fails to operate and dial lamps do not light. | 1. Defective fuse FS1 on front of panel in B model (FS1 or FS2 in C model). | 1. Replace fuse. If it blows again, check filter capacitors C42, C43, and C44. |
| | Broken connecting leads to fuseholder. | Repair leads. |
| | Corroded fuseholder | Clean fuseholder. |
| | Power transformer T16 primary a-c line connections incorrectly or poorly made. | Operate switch SW10 to correct voltage position. |
| 2. No receiver output. With meter switch SW3 at ON, *S* meter dips and rises as TUNING dial is rotated. | 2. Defect exists between detector and a-f output stages. | 2. Use headphones, with .1 μf capacitor in series with one lead, across grid and plate circuits of successive audio stages to localize defective stage. Test the vacuum tube in the defective stage. If necessary, make voltage and resistance measurements to locate defective part, or use signal substitution in audio stages. |
| 3. Receiver inoperative. *S* meter does not deflect as receiver is tuned. Dial lamp lights. | 3. Failure of B+ supply | 3. Check tube V13. Check B plus voltage across C42, C43, and C44. |
| 4. A-f circuit satisfactory. No output obtained when receiver is tuned to signal. | 4. Faulty r-f or i-f stage or stages | 4. Test tubes. Make voltage and resistance readings at tube sockets. Use signal substitution in r-f and i-f stages. |
| 5. B.F.O. switch turned on. No c-w signals. | 5. Bfo defective | 5. Check tube V14. Replace if necessary. Check voltage and resistance (figs. 27 and 28). |
| 6. Reception weak | 6. Faulty antenna connection | 6. Tighten antenna connections. |
| | Weak, or defective tubes | Check and replace tubes, if necessary. |
| | Low B+ voltage | Make voltage and resistance checks. Check tube V13. |
| 7. With a station tuned in, receiver output low, *S* meter appears sluggish. | 7. Low plate or screen voltage due to shorted capacitor in plate or screen return circuits. | 7. Check voltage and resistance at sockets against figures 27 and 28. |
| | Receiver not properly alined | Realine as outlined in sec. III, of this chapter. |
| 8. Reception distorted | 8. Open grid resistor in audio stage (V9, V11, or V12). | 8. Check voltages and resistances at sockets (figs. 27 and 28). Replace defective resistor. |
| | Incorrect grid bias voltages | Check grid voltages against chart with A.V.C. control at OFF. |
| | R.F. GAIN control (R11) open or shorted. | Replace R.F. GAIN control (R11). |
| | Incorrect output impedance match | Check secondary taps of transformer T15 and speaker connections. |
| | Improper operating potentials | Check tube voltages against chart (figs. 27 and 28). |
| | Defective B+ supply | Check B+ filter chokes L6 and L7 for shorted turns and filter capacitor C42 for excessive leaking. |

| Symptom | Probable trouble | Correction |
|---|---|---|
| | Leaky screen bypass and plate circuit decoupling capacitors. | Replace capacitors. |
| | Strong signal with A.V.C. control at OFF. | Reduce R.F. GAIN control (R11) setting. |
| 9. Hum at output | 9. Shorted turns in B+ filter chokes L6 and L7. | 9. Check resistance of B+ filter chokes L6, and L7. |
| | Defective filter capacitors | Replace filter capacitors. |
| 10. Intermittent noise | 10. Defective tube, resistor, or capacitor | 10. With an insulated probe, gently tap all tubes for loose elements; resistors, capacitors, and soldered connections for faulty connections. |
| 11. Whistle or howl in receiver | 11. Defective tube. Poor shielding and grounding. | 11. Check tubes. Shunt bypass capacitors with known good capacitors of equal value to locate open capacitors. |

## 56. Signal Substitution Notes

*a.* Signal substitution requires a source of audio' i-f, and r-f signals. Use a signal generator which will produce each of the desired signals required in any specific substitution test. In addition, a headset, or permanent-magnet speaker is necessary. Plug the headset into PHONES jack, or connect the speaker (with a matching transformer, if necessary) to the audio output terminals on TS1.

*b.* An analyzer and tube tester are needed to locate the defective part after the faulty stage has been located by signal substitution.

*c.* In the signal tests, ground one side of the signal generator output to the receiver chassis. Connect the other side through a capacitor (about .01 μf) to the receiver point as directed. Note the volume. Listen for serious distortion from the loudspeaker, or headset, at the various points in the signal substitution procedure. When working from the output to the input stages, decrease the output of the signal generator as much as possible. If possible, compare the faulty receiver with a receiver known to be in good condition.

*d.* Check the wiring and soldering in each stage during the procedure.

***Caution:*** Do not remove the shield can of the r-f tuning unit until the trouble has been traced to that particular unit. Do not damage the wiring by pushing it back and forth during inspection. Be careful to prevent damage to the receiver in any other way.

*e.* Misalinement of one or more stages of the receiver will cause reduced output. Misalinement of the bfo may prevent c-w output.

*f.* When trouble is localized in a given stage, first test the tube; then measure the voltage; and, finally, measure the resistance at the tube socket of the stage. (Trouble in a circuit or stage may not cause changes in voltage and resistance measurements at the tube socket. The instructions in *g* and *h* below are merely a guide and should suggest other procedures, such as voltage and resistance measurements on individual parts.)

*g.* Remove only *one* tube at a time when testing. Check the number of the tube, test the tube, and, if it is not defective, return it to its proper socket before another tube is removed.

*h.* At each step, it is assumed that all previous steps were completed satisfactorily. Clear any trouble located before proceeding with any succeeding steps.

## 57. Terminal Voltage Chart

Measurement listed in the chart below should be taken with a 20,000-ohms-per-volt meter and with the line voltage at 115 volts ac. All readings are dc unless otherwise specified. All readings are obtained from terminal to chassis ground unless specified.

| Component | Terminal | | | | | | | | | | |
|---|---|---|---|---|---|---|---|---|---|---|---|
| | 1 | 2 | 3 | 4 | 5 | 6 | 7 | 8 | 9 | 10 | 11 |
| Transformer T15 | 263 | 265 | 263 | NR[f] | NR[f] | NR[f] | 0 | NR[f] | NR[f] | NC[g] | NC[g] |
| Transformer T16 | 115 ac[c] | 115 ac[d] | 115 ac[c] | 115 ac[d] | 0 | 6.3 ac | 283 | 283 | 282 ac | 0 | 282 ac |
| Inductance L6 and L7 | 242 | 265 | 278 | nc[g] | NC[g] | NC[g] | NC[g] | NC[g] | NC[g] | NC[g] | NC[g] |
| Line filter LF1 | 115 ac[a] | 115 ac[a] | 115 ac[b] | 115 ac[b] | 0 | NC[g] | NC[g] | NC[g] | NC[g] | NC[g] | NC[g] |
| Fuse FS1 | 115 ac[e] | 115 ac[e] | NC[g] | NC[g] | NC[g] | NC[g] | NC[g] | NC[g] | NC[g] | NC[g] | NC[g] |
| Lamp LM1 | 0 | 6.3 ac | NC[g] | NC[g] | NC[g] | NC[g] | NC[g] | NC[g] | NC[g] | NC[g] | NC[g] |
| Lamp LM2 | 0 | 6.3 ac | NC[g] | NC[g] | NC[g] | NC[g] | NC[g] | NC[g] | NC[g] | NC[g] | NC[g] |
| Socket SO1 | 0 | NC[g] | 278 | 278 | .3 | 6.3 ac | 6.3 ac | 0 | NC[g] | NC[g] | NC[g] |

[a] Measured between terminals 1 and 2.
[b] Measured between terminals 3 and 4.
[c] Measured between terminals 1 and 3.
[d] Measured between terminals 2 and 4.
[e] Measured between either of these terminals and No. 2 on LF1.
[f] NR—No reading.
[g] NC—No connection.

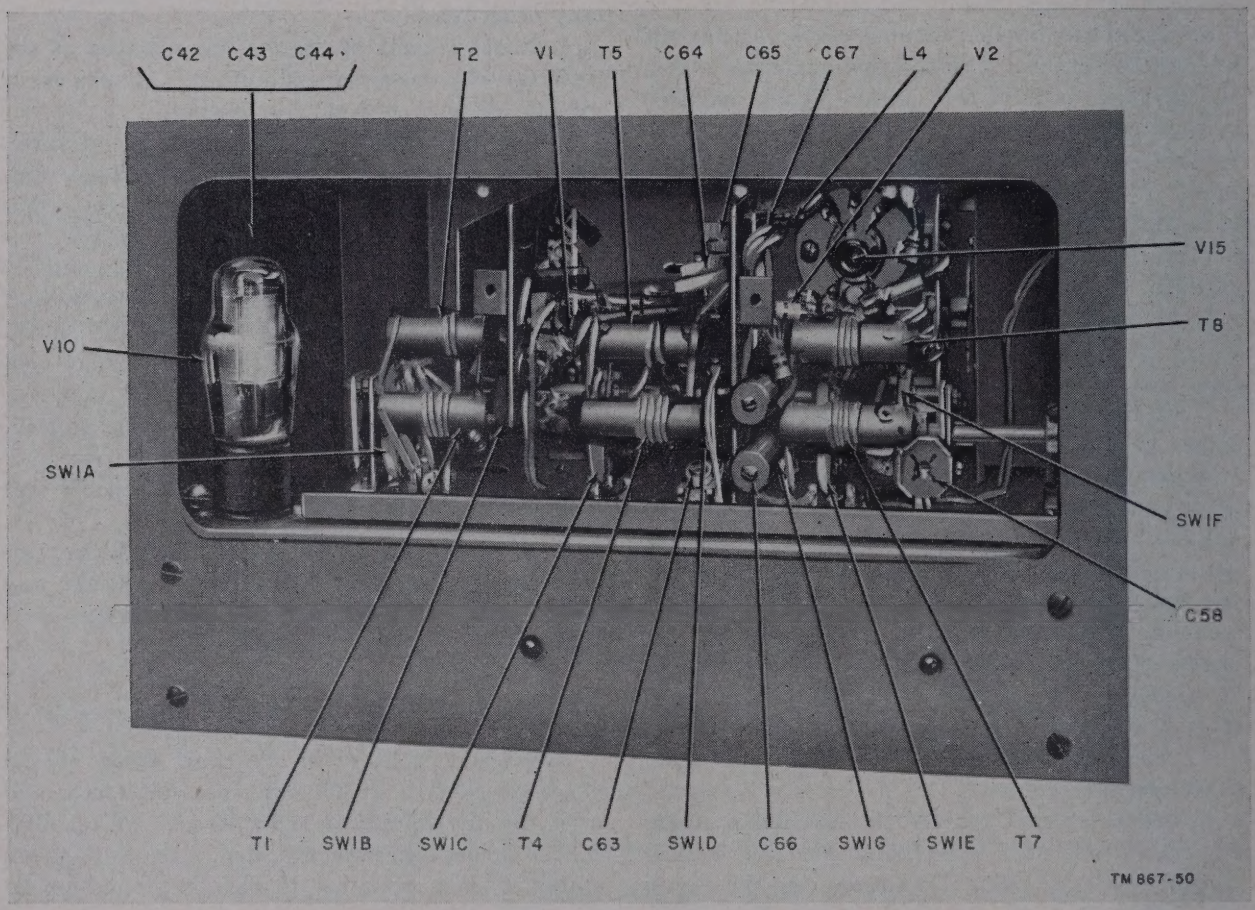


*Figure 24. Radio Receiver BC–787–B, side view of r-f section with shield removed.*

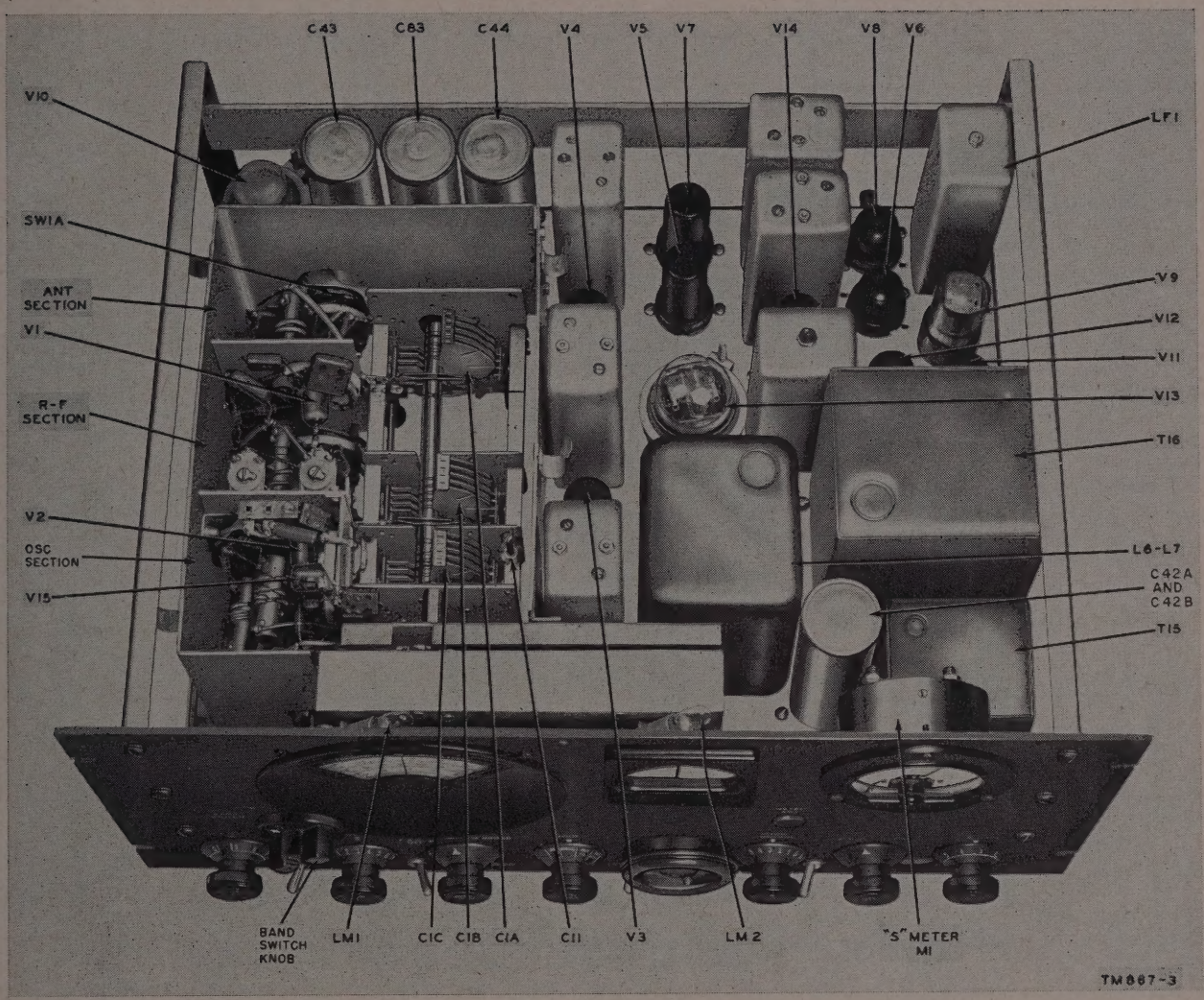


*Figure 25. Radio Receiver BC–787–C, top view with r-f shield removed.*

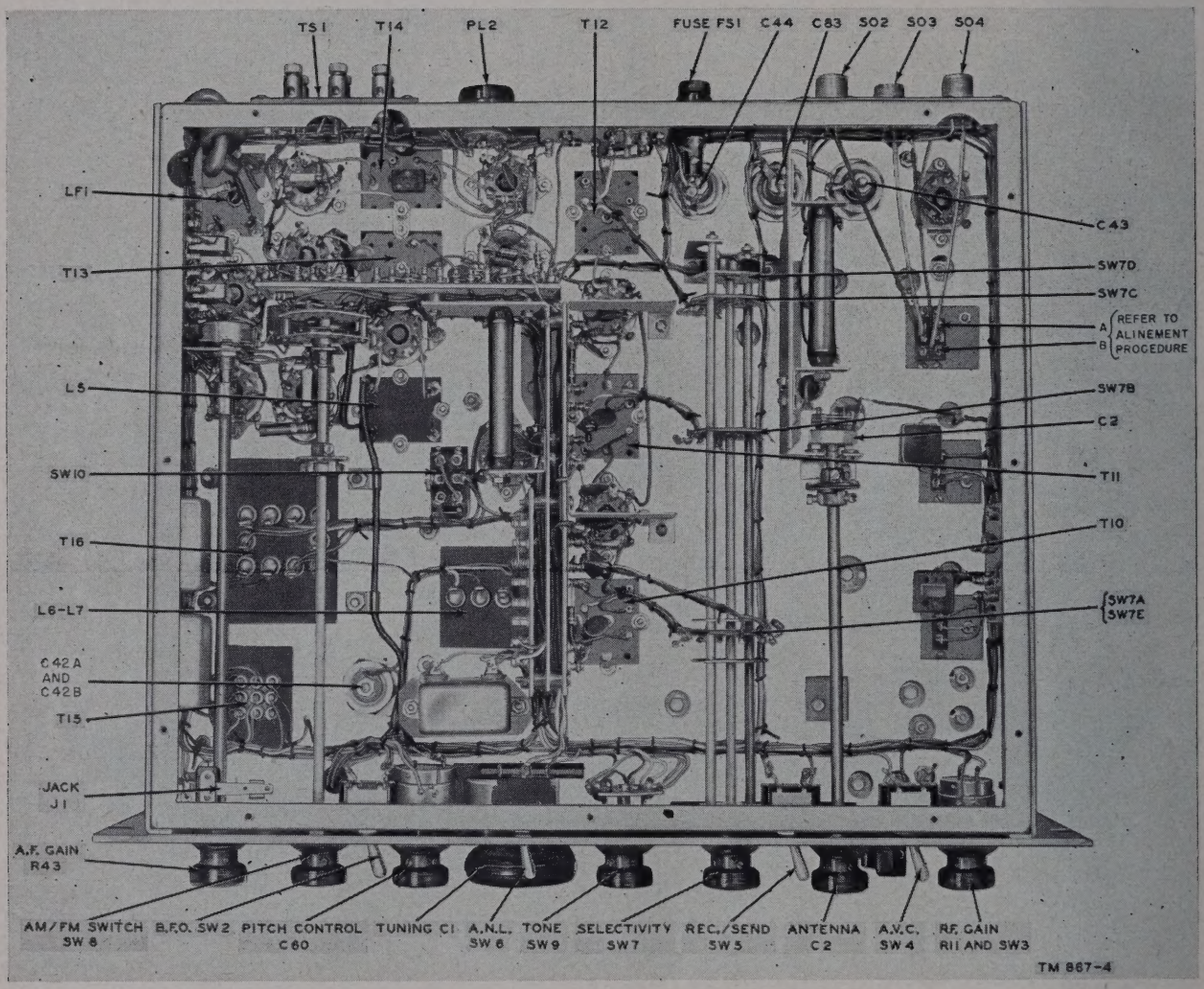


*Figure 26. Radio Receiver BC–787–C, bottom view of chassis.*

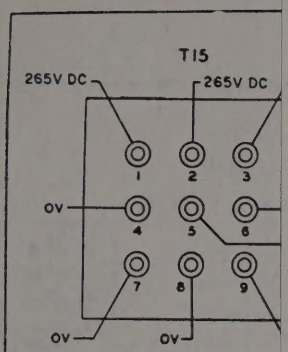
T15
265V DC
265V DC
1
2
3
0V
4
5
6
7
8
9
0V
0V

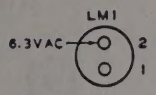
LM1
6.3VAC
2
1

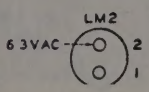
LM2
6.3VAC
2
1

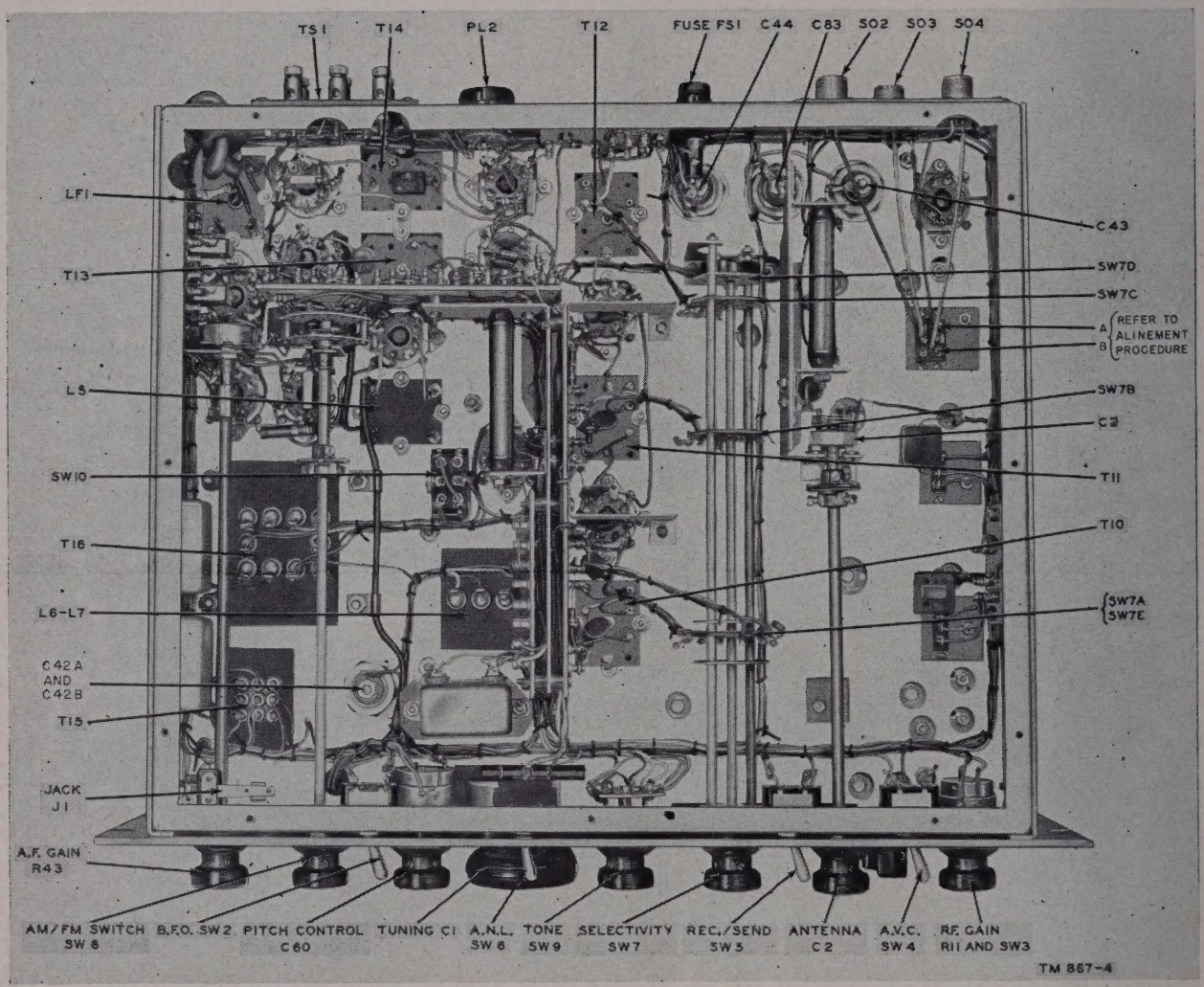


*Figure 26. Radio Receiver BC–787–C, bottom view of chassis.*

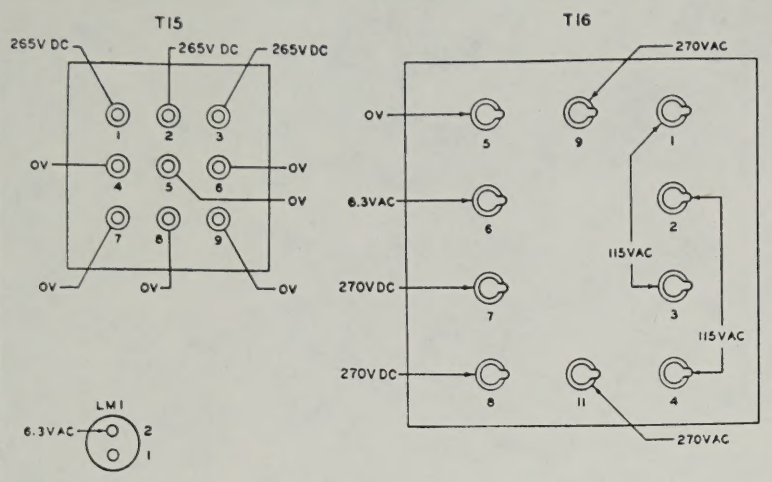


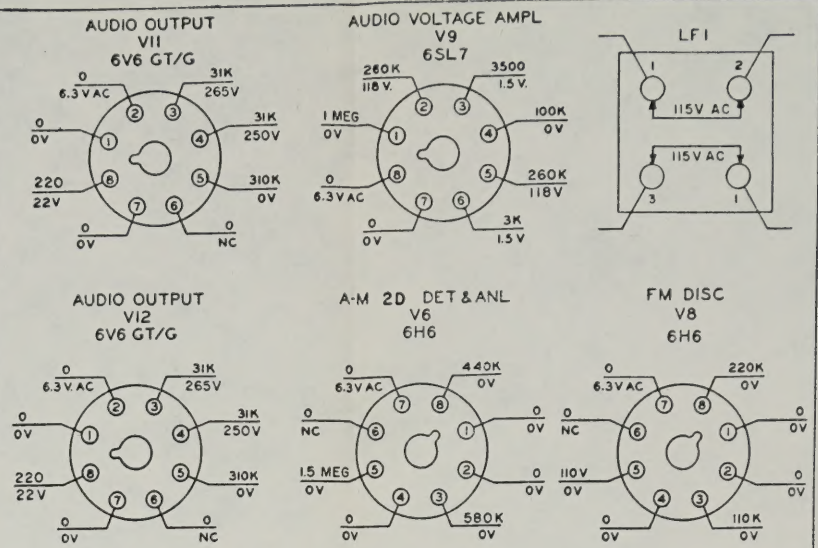


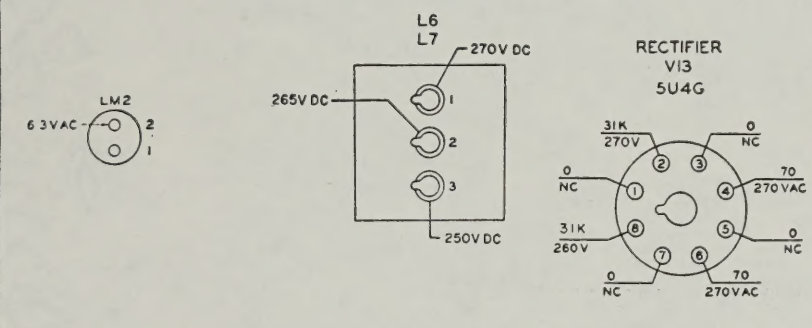


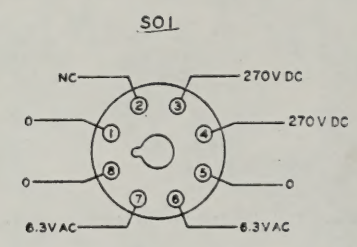


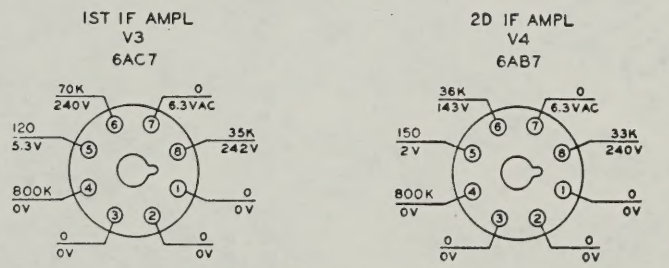


1. VI, V2, & VI5 ARE ACORN TUBES MOUNTED ON A SUB-CHASSIS.
2. * VOLTAGE MEASURED BETWEEN EITHER CONTACTS 1 AND 2 OF FSI AND TERMINAL NO. 4 OF LFI SHOULD BE 115VAC.
3. X INDICATES A TIE LUG.
4. + INDICATES BFO SWITCH, SW2, ON.
5. NC INDICATES NO CONNECTION.
   WARNING: BEFORE MEASURING ANY RESISTANCE: REMOVE THE A-C LINE CORD FROM THE OUTLET.
6. VOLTAGE AND RESISTANCE MEASUREMENTS ARE BETWEEN TUBE SOCKET PINS AND CHASSIS. ANTENNA NOT CONNECTED.
7. ALL VOLTAGE MEASUREMENTS ARE MADE WITH A 20,000 OHM-PER-VOLT METER.
8. ALL RESISTANCE MEASUREMENTS ARE MADE BETWEEN SOCKET AND GROUND WITH AN ANALYZER-METER; POWER OF F, ALL FRONT PANEL CONTROLS AT M AXIMUM AND SWITCHES ON, AM/FM SWITCH SET AT AM, BAND SWITCH AT 1.

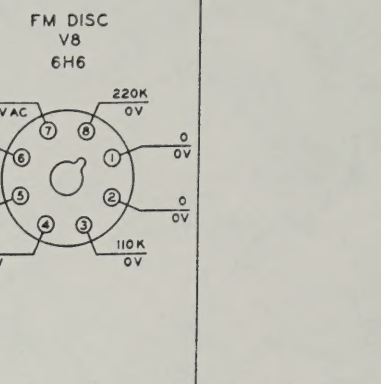


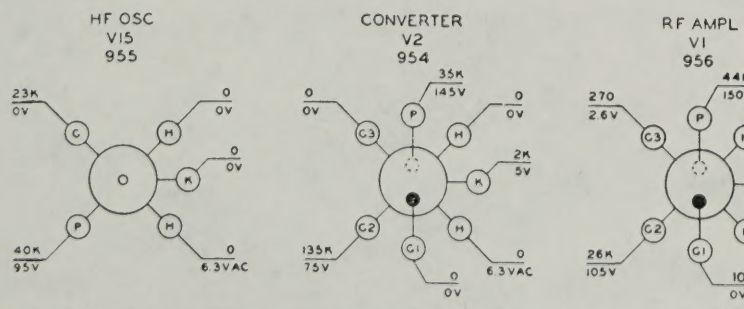


TM 867-12

*Figure 28. Radio Receiver BC-787-B, resistance and voltage chart.*

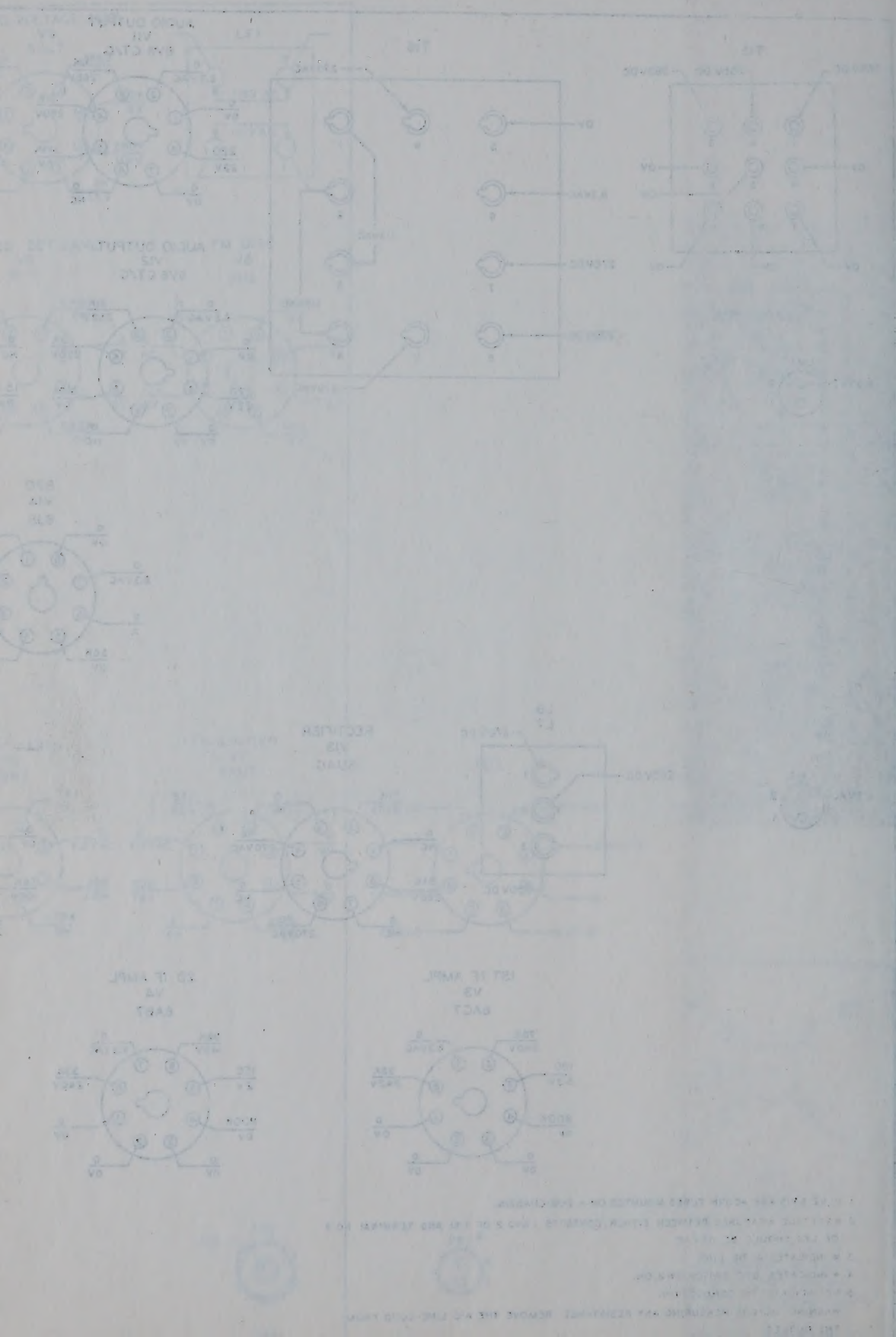

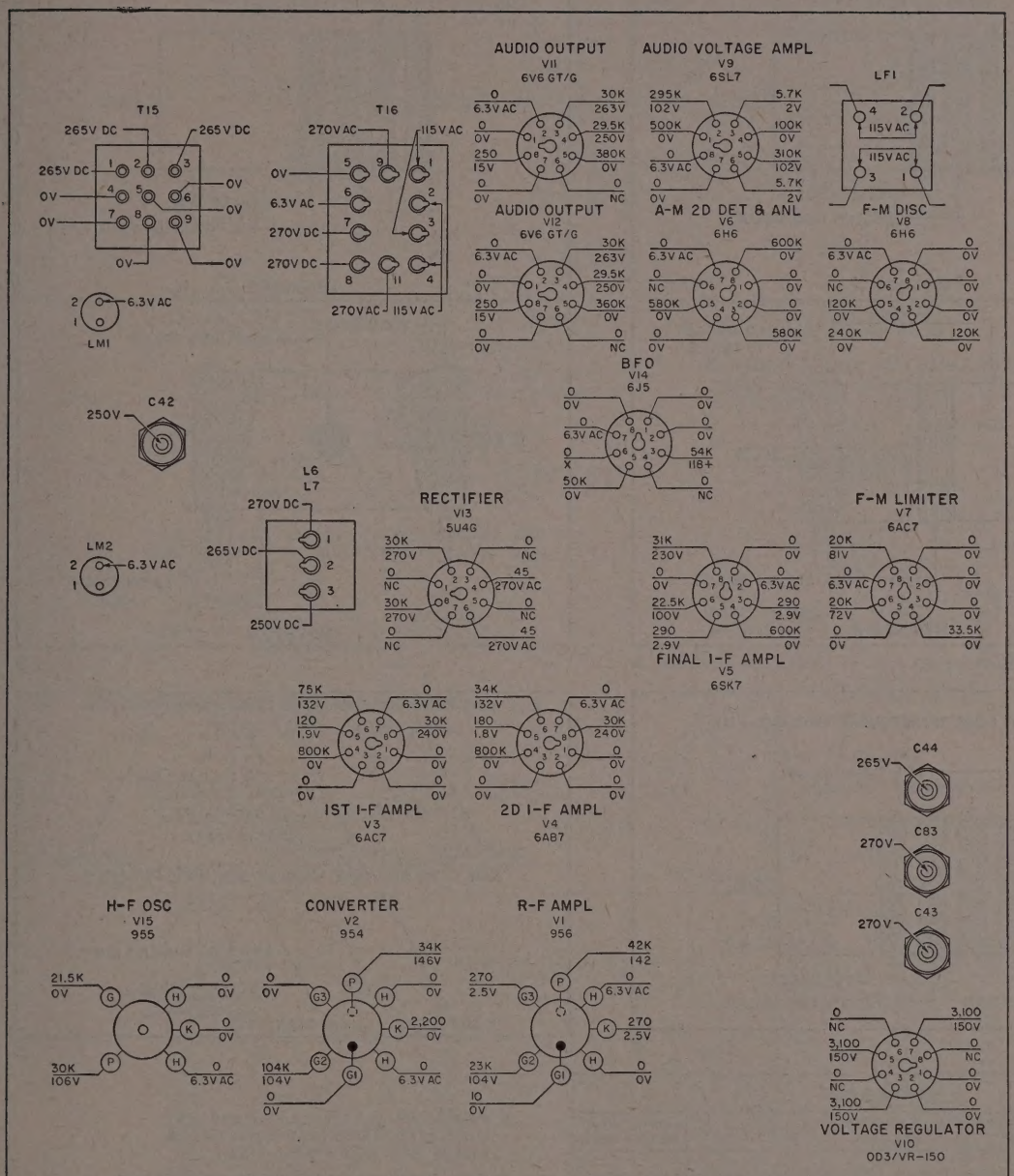


NOTES:

1. V1, V2, AND V3 ARE ACORN TUBES MOUNTED ON A SUB-CHASSIS.
2. * VOLTAGE MEASURED BETWEEN EITHER CONTACTS 1 AND 2 OF FS1 AND TERMINAL NO. 4 OF LF1 SHOULD BE 115 V AC.
3. X INDICATES A TIE LUG.
4. + INDICATES BFO SWITCH, SW2, ON
5. NC INDICATES NO CONNECTION.
   WARNING: BEFORE MEASURING ANY RESISTANCE: REMOVE THE A-C LINE CORD FROM THE OUTLET
6. VOLTAGE AND RESISTANCE MEASUREMENTS ARE BETWEEN TUBE SOCKET PINS AND CHASSIS. ANTENNA NOT CONNECTED.
7. ALL VOLTAGE MEASUREMENTS ARE MADE WITH A 20,000 OHM-PER-VOLT METER.
8. ALL RESISTANCE MEASUREMENTS ARE MADE BETWEEN SOCKET AND GROUND WITH AN ANALYZER-METER; POWER OFF, ALL FRONT PANEL CONTROLS AT MAXIMUM AND SWITCHES ON, AM/FM SWITCH SET AT AM BAND SWITCH AT 1

TM 867-27

*Figure 27. Radio Receiver BC-787-C, resistance and voltage chart.*

## RESISTOR COLOR AND LETTER CODE

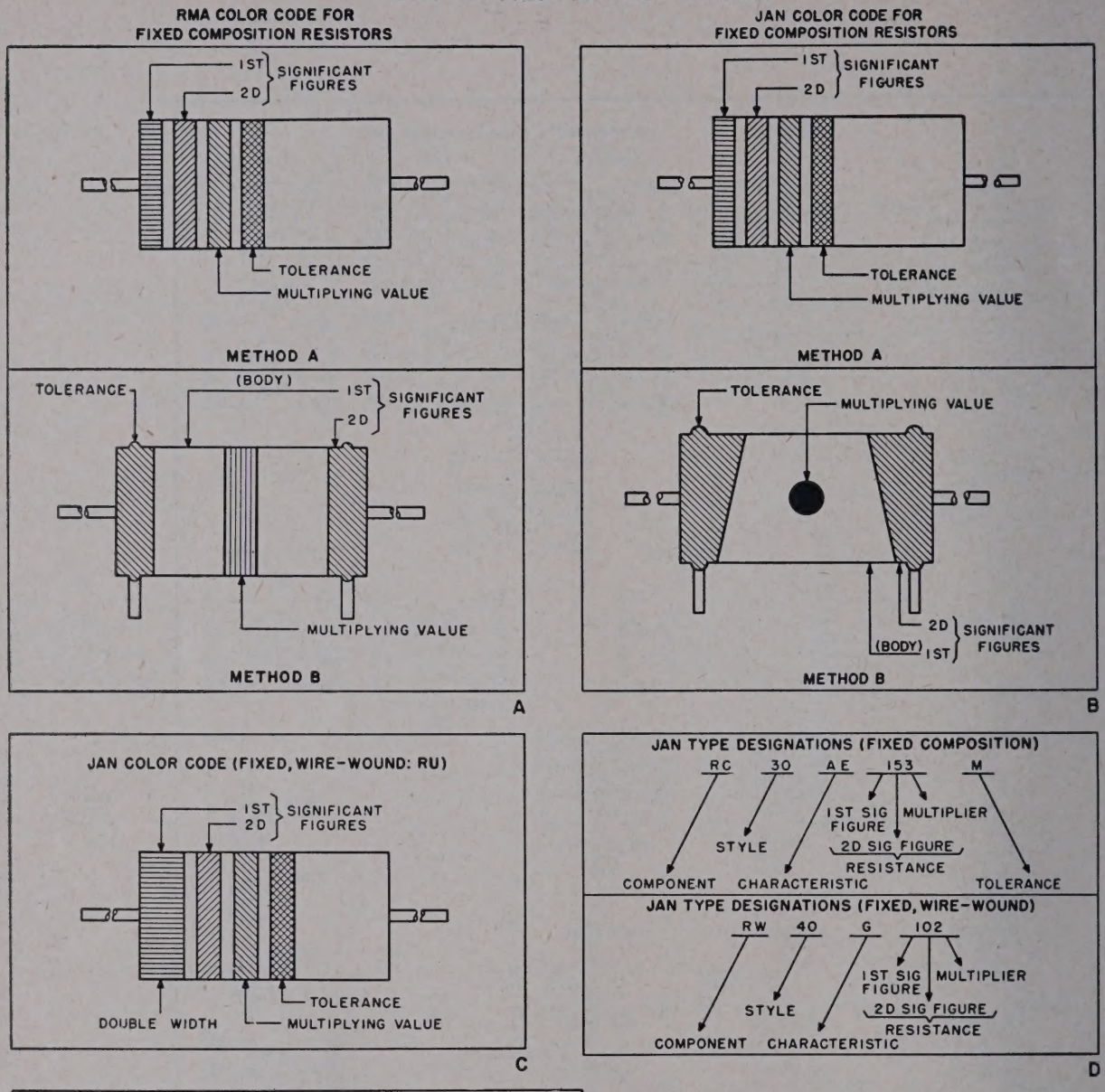


| STANDARDS | | | | |
|---|---|---|---|---|
| COLOR | SIGNIFICANT FIGURE | MULTIPLYING VALUE | TOLERANCE (%) | JAN LETTER TOLERANCE |
| BLACK | 0 | 1 | — | — |
| BROWN | 1 | 10 | ± 1 | F |
| RED | 2 | 100 | ± 2 | G |
| ORANGE | 3 | 1,000 | ± 3 | — |
| YELLOW | 4 | 10,000 | ± 4 | — |
| GREEN | 5 | 100,000 | ± 5 | — |
| BLUE | 6 | 1,000,000 | ± 6 | — |
| VIOLET | 7 | 10,000,000 | ± 7 | — |
| GRAY | 8 | 100,000,000 | ± 8 | — |
| WHITE | 9 | 1,000,000,000 | ± 9 | — |
| GOLD | — | 0.1 | ± 5 | J |
| SILVER | — | 0.01 | ±10 | K |
| NO COLOR | — | — | ±20 | M |

**NOTES:**

1. RESISTORS WITH AXIAL LEADS ARE INSULATED. RESISTORS WITH RADIAL LEADS ARE NON-INSULATED.
2. RMA: RADIO MANUFACTURERS ASSOCIATION.
3. JAN: JOINT ARMY - NAVY.
4. THESE COLOR AND NUMBER CODES GIVE ALL RESISTANCE VALUES IN OHMS.
5. RESISTIVE COMPONENTS USED FOR LETTER TOLERANCES ARE: RC, RN, AND RU.
6. WATTAGE FOR RW TYPES IS FOUND IN THE JAN SPECIFICATIONS UNDER CHARACTERISTICS.

TM RC

*Figure 29. Resistor color codes.*

## CAPACITOR COLOR AND LETTER CODES

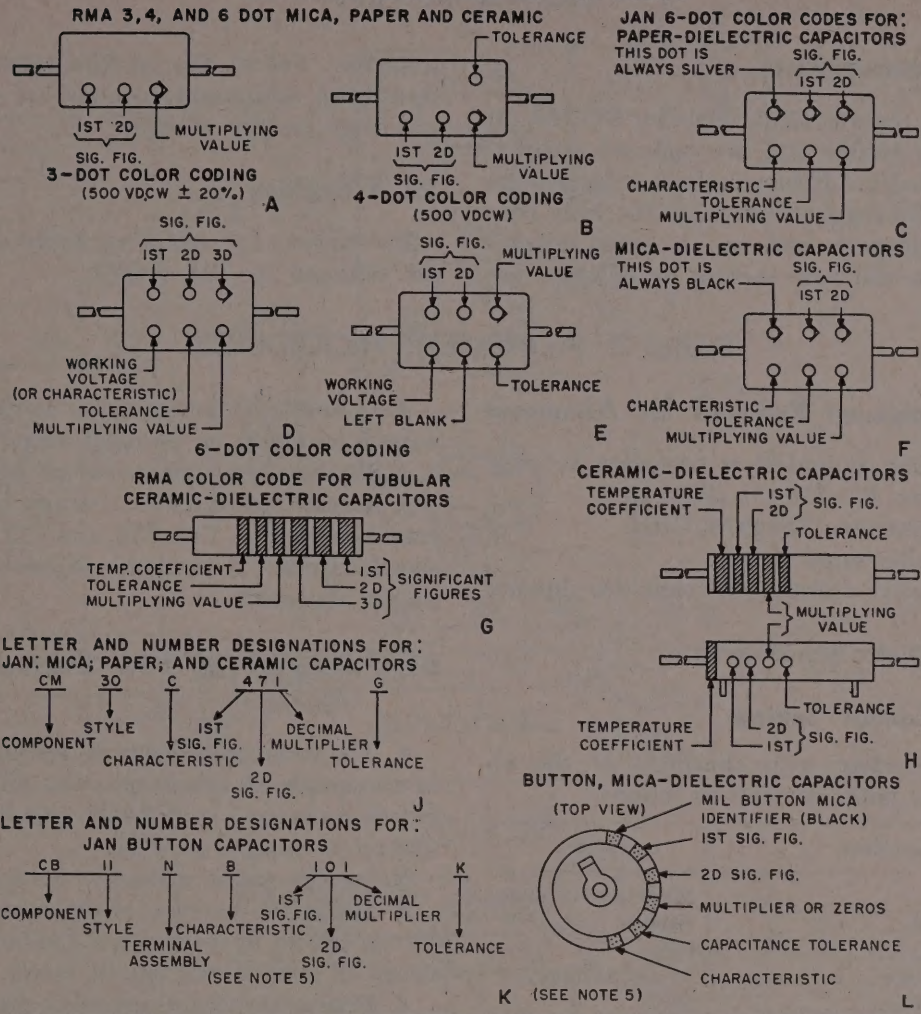


| - STANDARDS - | | | | | JAN MICA-CM | | JAN PAPER-CM | | JAN CERAMIC-CC | | | | | |
|---|---|---|---|---|---|---|---|---|---|---|---|---|---|---|
| | | | | | | | | | | CAP. TOL. FOR MORE THAN 10 UUF | | CAP. TOL. FOR 10 UUF OR LESS | | |
| COLOR | SIG. FIG. | DECIMAL MULTIPLIER | % TOL. | VDCW | LETTER TOL. | CHARAC-TERISTIC | LETTER TOL. | CHARAC-TERISTIC | DEC. MULT. | % | LETTER DESIG-NATION | UUF | LETTER DESIG-NATION | CHARAC-TERISTIC |
| BLACK | 0 | 1 | ±20 | 500 | M | A | M | A | 1 | ±20 | M | ±2.0 | G | C |
| BROWN | 1 | 10 | ± 1 | 100 | - | B | - | E | 10 | ± 1 | F | - | - | H |
| RED | 2 | 100 | ± 2 | 200 | G | C | - | H | 100 | ± 2 | G | - | - | L |
| ORANGE | 3 | 1,000 | ± 3 | 300 | - | D | N* | J | 1,000 | - | - | - | - | P |
| YELLOW | 4 | 10,000 | ± 4 | 400 | - | E | - | P | - | - | - | - | - | R |
| GREEN | 5 | 100,000 | ± 5 | 500 | - | F | - | R | - | ± 5 | J | ±0.5 | D | S |
| BLUE | 6 | 1,000,000 | ± 6 | 600 | - | G | - | S | - | - | - | - | - | T |
| VIOLET | 7 | 10,000,000 | ± 7 | 700 | - | - | - | T | - | - | - | - | - | U |
| GRAY | 8 | 100,000,000 | ± 8 | 800 | - | - | - | - | 0.01 | - | - | ±0.25 | C | B |
| WHITE | 9 | 1,000,000,000 | ± 9 | 900 | - | - | - | - | 0.1 | ± 10 | K | ±1.0 | F | SL |
| GOLD | - | 0.1 | ± 5 | 1,000 | J | - | - | - | - | - | - | - | - | A |
| SILVER | - | 0.01 | ±10 | 2,000 | K | - | K | - | - | - | - | - | - | - |
| NO COLOR | - | - | ±20 | 500 | - | - | - | - | - | - | - | - | - | - |
| * THE TOLERANCE OF THIS CAPACITOR IS ±30%, NOT ±2% | | | | | | | | | | | | | | |

NOTES

JAN: JOINT ARMY-NAVY
RMA: RADIO MANUFACTURERS ASSOCIATION

1. THESE COLOR AND LETTER CODES GIVE CAPACITANCES IN MICROMICROFARADS
2. THIS TABLE IS ADAPTED FOR JAN AND RMA COLOR AND JAN LETTER TYPE DESIGNATIONS
3. CERAMIC AND MICA CAPACITORS, BOTH JAN AND RMA, ARE GENERALLY 500 VDCW
4. BUTTON CAPACITORS ARE GENERALLY 300 VDCW
5. READ BUTTON CAPACITOR TOLERANCE UNDER CERAMICS OF MORE THAN 10 UUF
6. CHARACTERISTICS ARE AVAILABLE IN JAN CAPACITOR SPECIFICATION MANUALS
7. THE COMPONENTS USED ABOVE FOR JAN LETTER TYPE DESIGNATIONS ARE:
   *CB* MICA BUTTON: *CC* CERAMIC; *CM* MICA MOULDED: *CN* PAPER MOULDED

TM CC

*Figure 30. Capacitor color codes.*

## Section II. REPAIRS

### 58. Replacement of Parts

Most of the parts in Radio Receiver BC–787–(*) are readily accessible and are replaced easily if found to be faulty. If tube sockets or wafer-type switches require replacement, mark the wires connected to these parts with tags to avoid misconnections when the new sockets or switches are installed. Follow this practice whenever replacement of a component requires the disconnection of a large number of wires.

### 59. Refinishing

Instructions for refinishing badly marred panels are outlined in TM 9–2851.

## Section III. ALINEMENT PROCEDURES

### 60. Test Equipment Required for Alinement

The following equipment is necessary to aline Radio Receiver BC–787–(*) properly:

*a.* Signal generator TS–497A/URR.

*b.* Nonmetallic screw driver.

*c.* Noninductive resistor, 100-ohm, for dummy antenna.

*d.* Output Meter TS–585A/U.

### 61. Panel Control Settings

Before proceeding with alinement of the receiver, set the panel controls as follows:

| Panel control | Position |
|---|---|
| R. F. GAIN | Maximum clockwise. |
| BAND SWITCH | Band 2. |
| A.V.C. switch | OFF. |
| ANTENNA trimmer | At any position. |
| SEND-REC. switch | REC. |
| SELECTIVITY switch | SHARP. |
| TONE switch | At any position. |
| A.N.L. switch | OFF. |
| PITCH CONTROL | At any position. |
| B.F.O. switch | OFF. |
| A.M.-F.M. | A.M. |
| A.F. GAIN | Maximum clockwise. |

### 62. Alinement of I-f Stages
(figs. 12 through 15)

*a.* Remove the grid clip from tube V2. The grid is the center connection on the short end of the tube.

*b.* Connect the *high* side of the signal generator to V2 grid. Use a small clip or a flexible piece of wire for this connection. *Do not* attempt to solder a connection to the lead. The heat from the iron will crack the envelope of the vacuum tube.

c. Connect the *low* side of the signal generator to the chassis.

*d.* Connect the output meter across the speaker output terminals on terminal strip TS1.

*e.* Set the signal generator at 5.25 mc.

*f.* Adjust the variable trimmer capacitors on transformers T10, T11, T12, and T13 for maximum signal output. Repeat the adjustment to insure proper alinement.

### 63. Alinement of F-M Discriminator
(fig. 22)

*a.* The front panel controls are set as indicated in paragraph 62, except that the SELECTIVITY switch is changed to BROAD, and the A.M.-F.M. control is changed to F.M.

*b.* Set the signal generator at 5.25 mc.

*c.* Adjust the variable trimmer capacitor across the secondary of transformer T14 until the output drops to zero on the output meter.

*d.* Detune the signal generator slightly to either side until a readable indication is shown on the output meter.

*e.* Adjust the variable trimmer capacitor across the primary of T14 for maximum output.

*f.* Reset the signal generator to 5.25 mc and check for zero output.

*g.* Detune the signal generator to first one side and then the other side of resonance. Note the maximum output value for a given frequency deviation on each side of resonance. These maximum values should be the same for good balance. If they are not equal, tune the signal generator to the lower of the two values. Readjust the trimmer capacitor across the secondary of T14 until the output raises to an amount equal to half the difference between the two maximum output values previously noted. Retest for balance. Repeat the instructions in this paragraph until the maximum output values are identical when the signal generator is detuned to each side of resonance. If the

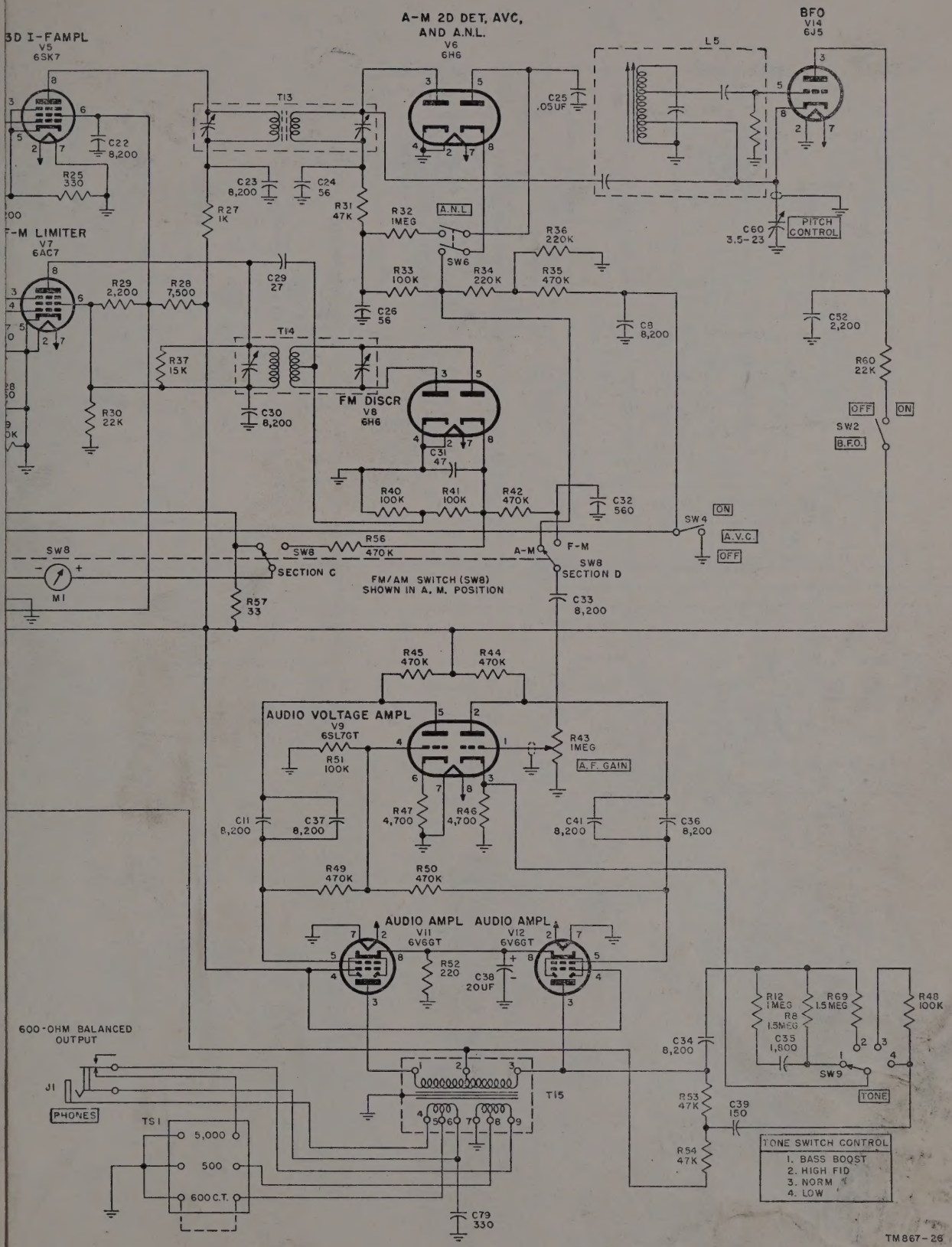
3D I-FAMPL
V5
6SK7
C22
8,200
R25
330
F-M LIMITER
V7
6AC7
R29
2,200
R28
7,500
C29
27
R37
15K
R30
22K
C30
8,200
T13
T14
A-M 2D DET, AVC,
AND A.N.L.
V6
6H6
C25
.05UF
C23
8,200
C24
56
R27
1K
R31
47K
R32
1MEG
A.N.L
SW6
C26
56
R33
100K
R34
220K
R36
220K
R35
470K
C8
8,200
FM DISCR
V8
6H6
C31
47
R40
100K
R41
100K
R42
470K
C32
560
L5
BFO
V14
6J5
C60
3.5-23
PITCH
CONTROL
C52
2,200
R60
22K
OFF
ON
SW2
B.F.O.
SW4
ON
A.V.C.
OFF
R56
470K
SW8
SECTION C
SW8
SECTION D
A-M
F-M
FM/AM SWITCH (SW8)
SHOWN IN A. M. POSITION
M1
R57
33
C33
8,200
R45
470K
R44
470K
AUDIO VOLTAGE AMPL
V9
6SL7GT
R51
100K
R43
1MEG
A.F. GAIN
C11
8,200
C37
8,200
R47
4,700
R46
4,700
C41
8,200
C36
8,200
R49
470K
R50
470K
AUDIO AMPL
V11
6V6GT
AUDIO AMPL
V12
6V6GT
R52
220
C38
20UF
600-OHM BALANCED
OUTPUT
J1
PHONES
T15
TS1
5,000
500
600 C.T.
C79
330
R12
1MEG
R8
1.5MEG
R69
1.5MEG
R48
100K
C35
1,800
SW9
TONE
C34
8,200
R53
47K
C39
150
R54
47K
TONE SWITCH CONTROL
1. BASS BOOST
2. HIGH FID
3. NORM
4. LOW
TM867-26

## Section II. REPAIRS

### 58. Replacement of Parts

Most of the parts in Radio Receiver BC–787–(*) are readily accessible and are replaced easily if found to be faulty. If tube sockets or wafer-type switches require replacement, mark the wires connected to these parts with tags to avoid misconnections when the new sockets or switches are installed. Follow this practice whenever replacement of a component requires the disconnection of a large number of wires.

### 59. Refinishing

Instructions for refinishing badly marred panels are outlined in TM 9–2851.

## Section III. ALINEMENT PROCEDURES

### 60. Test Equipment Required for Alinement

The following equipment is necessary to aline Radio Receiver BC–787–(*) properly:

*a.* Signal generator TS–497A/URR.

*b.* Nonmetallic screw driver.

*c.* Noninductive resistor, 100-ohm, for dummy antenna.

*d.* Output Meter TS–585A/U.

### 61. Panel Control Settings

Before proceeding with alinement of the receiver, set the panel controls as follows:

| Panel control | Position |
|---|---|
| R. F. GAIN | Maximum clockwise. |
| BAND SWITCH | Band 2. |
| A.V.C. switch | OFF. |
| ANTENNA trimmer | At any position. |
| SEND-REC. switch | REC. |
| SELECTIVITY switch | SHARP. |
| TONE switch | At any position. |
| A.N.L. switch | OFF. |
| PITCH CONTROL | At any position. |
| B.F.O. switch | OFF. |
| A.M.-F.M. | A.M. |
| A.F. GAIN | Maximum clockwise. |

### 62. Alinement of I-f Stages
(figs. 12 through 15)

*a.* Remove the grid clip from tube V2. The grid is the center connection on the short end of the tube.

*b.* Connect the *high* side of the signal generator to V2 grid. Use a small clip or a flexible piece of wire for this connection. *Do not* attempt to solder a connection to the lead. The heat from the iron will crack the envelope of the vacuum tube.

c. Connect the *low* side of the signal generator to the chassis.

*d.* Connect the output meter across the speaker output terminals on terminal strip TS1.

*e.* Set the signal generator at 5.25 mc.

*f.* Adjust the variable trimmer capacitors on transformers T10, T11, T12, and T13 for maximum signal output. Repeat the adjustment to insure proper alinement.

### 63. Alinement of F-M Discriminator
(fig. 22)

*a.* The front panel controls are set as indicated in paragraph 62, except that the SELECTIVITY switch is changed to BROAD, and the A.M.-F.M. control is changed to F.M.

*b.* Set the signal generator at 5.25 mc.

*c.* Adjust the variable trimmer capacitor across the secondary of transformer T14 until the output drops to zero on the output meter.

*d.* Detune the signal generator slightly to either side until a readable indication is shown on the output meter.

*e.* Adjust the variable trimmer capacitor across the primary of T14 for maximum output.

*f.* Reset the signal generator to 5.25 mc and check for zero output.

*g.* Detune the signal generator to first one side and then the other side of resonance. Note the maximum output value for a given frequency deviation on each side of resonance. These maximum values should be the same for good balance. If they are not equal, tune the signal generator to the lower of the two values. Readjust the trimmer capacitor across the secondary of T14 until the output raises to an amount equal to half the difference between the two maximum output values previously noted. Retest for balance. Repeat the instructions in this paragraph until the maximum output values are identical when the signal generator is detuned to each side of resonance. If the

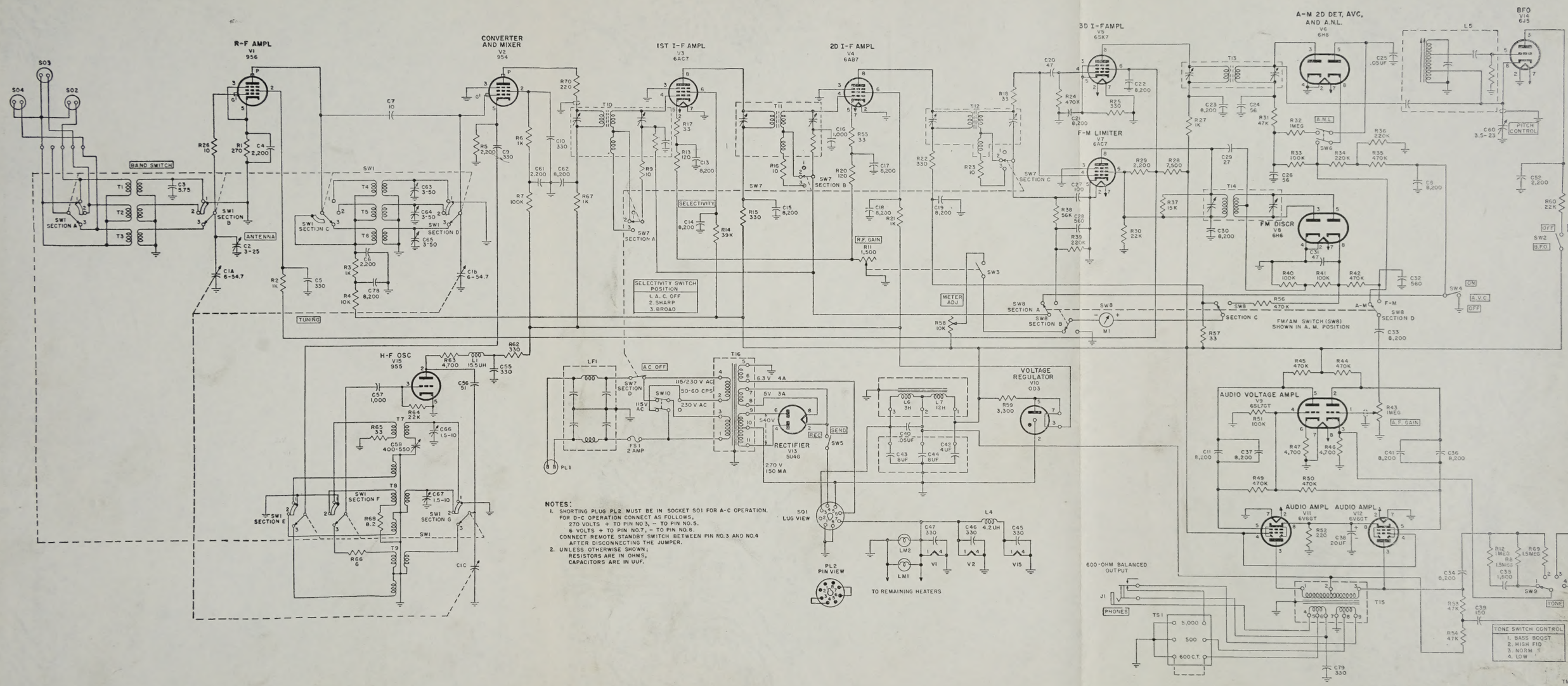


*Figure 31. Radio Receiver BC–787–B, schematic circuit diagram.*

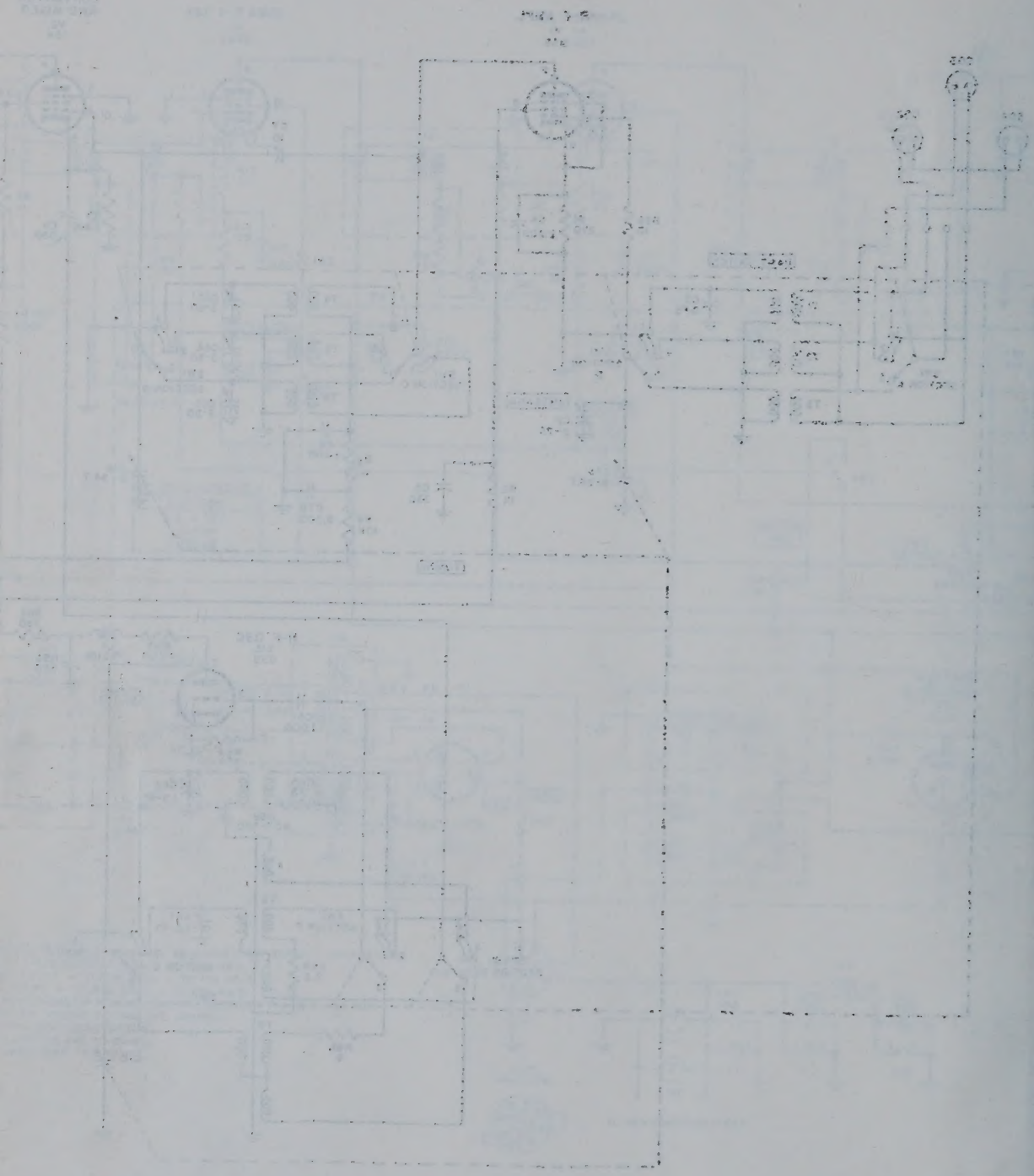

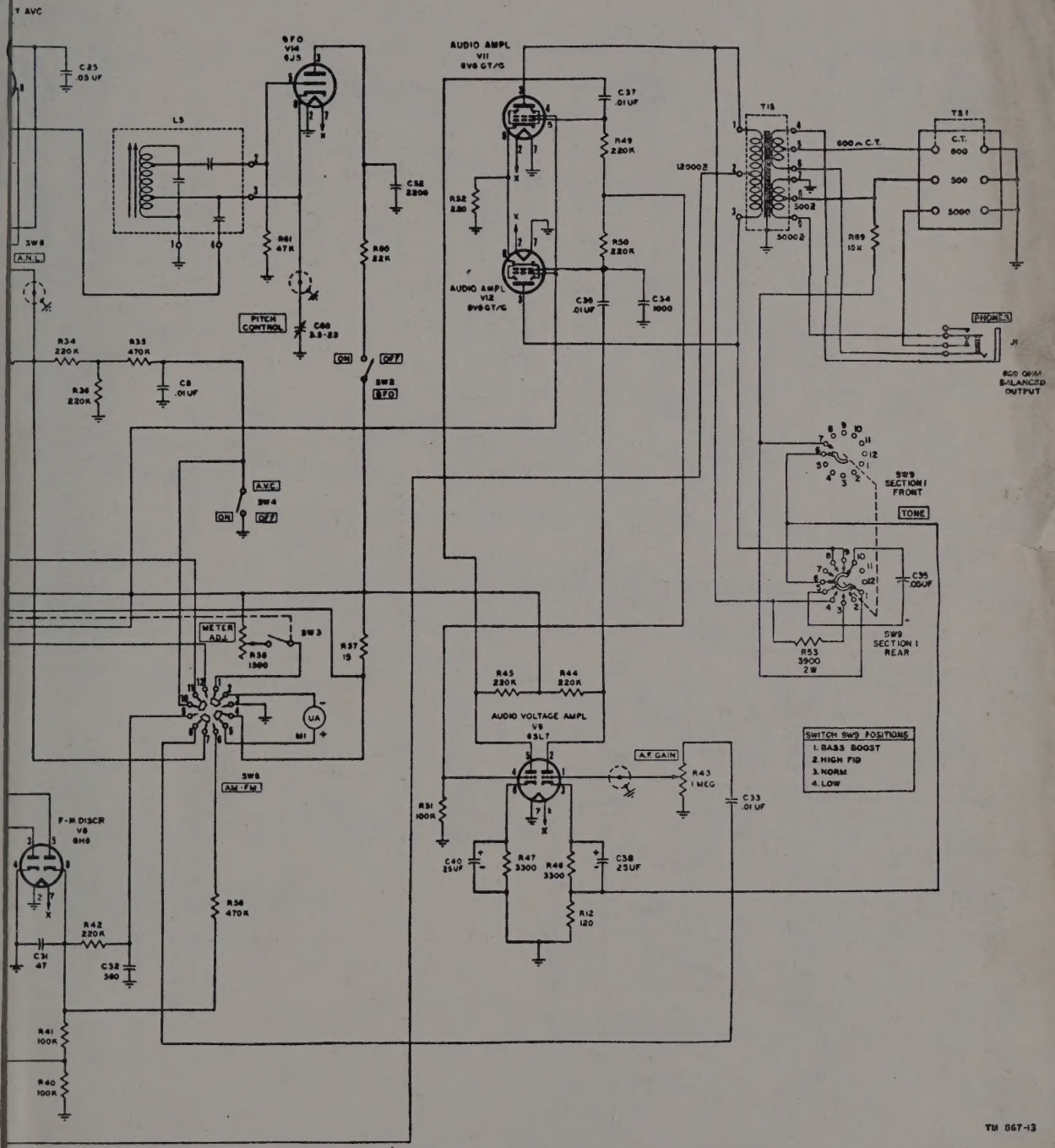

AUDIO AMPL
V11
6V6 GT/G
AUDIO AMPL
V12
6V6 GT/G
BFO
V14
6J5
L5
C25
.05 UF
C37
.01 UF
R49
220K
R50
220K
R52
220
C36
.01 UF
C34
1000
C32
2200
R61
47K
R60
22K
PITCH CONTROL
C60
3.5-23
ON
OFF
SW2
BFO
SW8
A.N.L.
R34
220K
R35
470K
R36
220K
C8
.01 UF
A.V.C.
SW4
ON
OFF
METER ADJ.
R58
1500
SW3
R57
15
UA
M1
SW6
AM-FM
F-M DISCR
V8
6H6
R42
220K
C31
47
C32
560
R56
470K
R41
100K
R40
100K
R45
220K
R44
220K
AUDIO VOLTAGE AMPL
V9
6SL7
A.F. GAIN
R43
1 MEG
C33
.01 UF
R51
100K
C40
25UF
R47
3300
R46
3300
C38
25UF
R12
120
T15
T31
600 Ω C.T.
C.T.
600
500
5000
R69
15K
PHONES
J1
600 OHM
BALANCED
OUTPUT
SW9
SECTION I
FRONT
TONE
C35
.05UF
SW9
SECTION I
REAR
R53
3900
2W
SWITCH SW9 POSITIONS
1. BASS BOOST
2. HIGH FID
3. NORM
4. LOW


TM 867-13

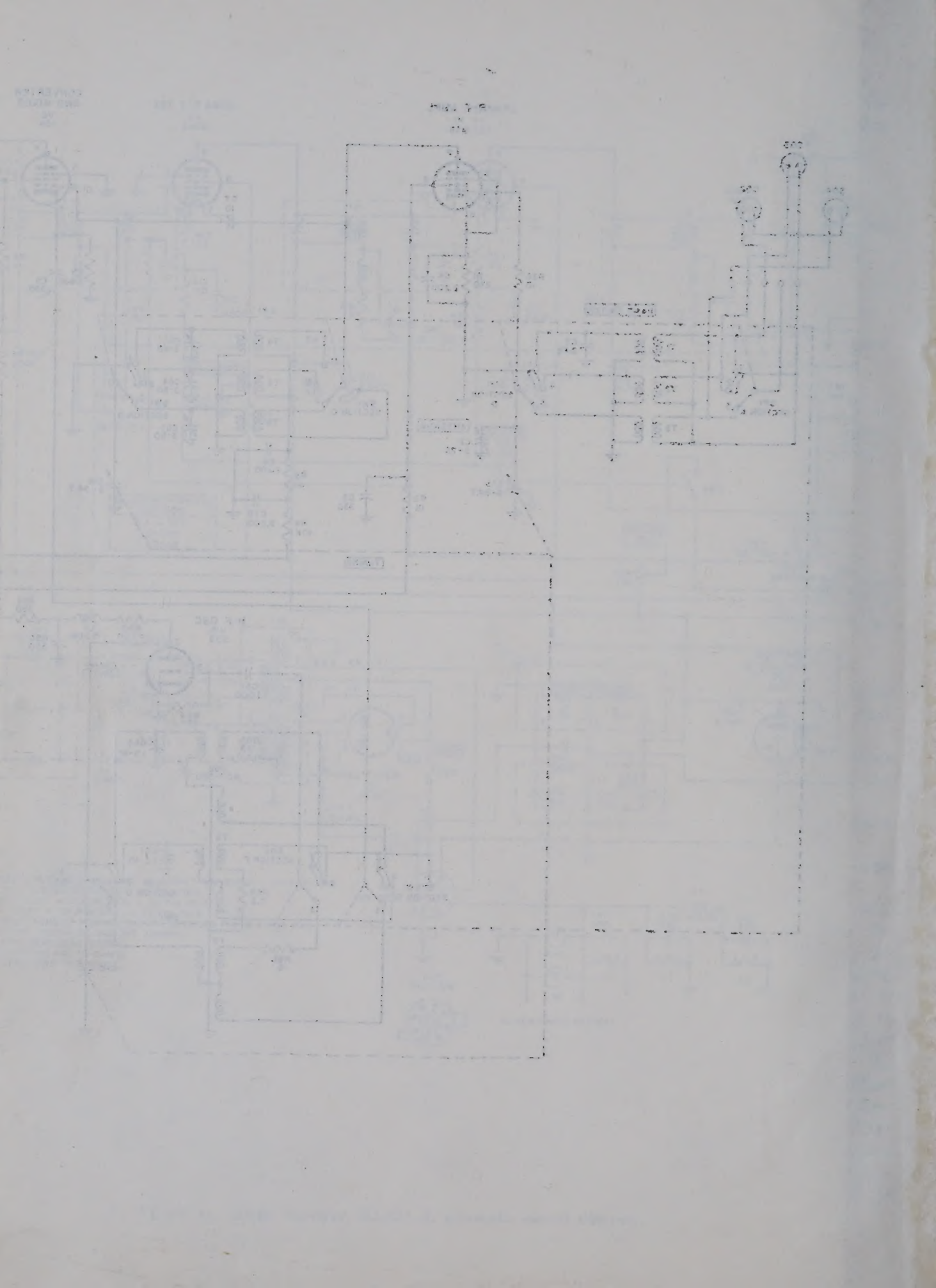

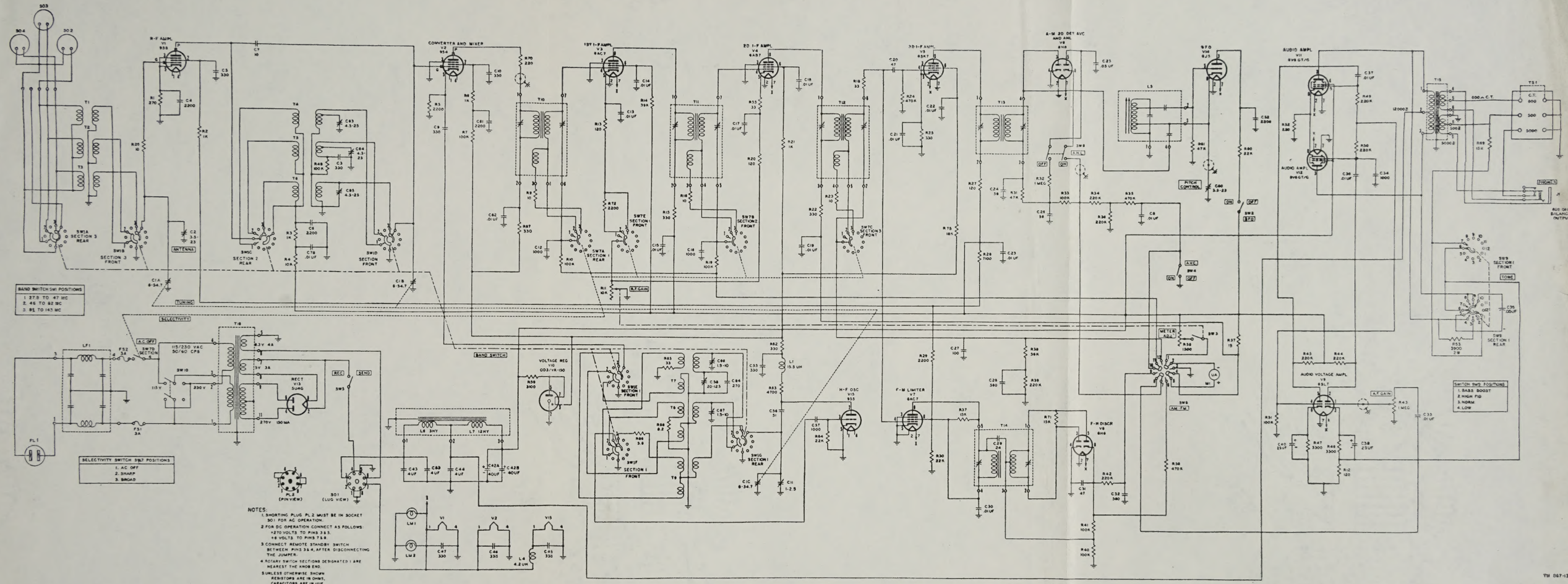


*Figure 32. Radio Receiver BC–787–C, schematic circuit diagram.*

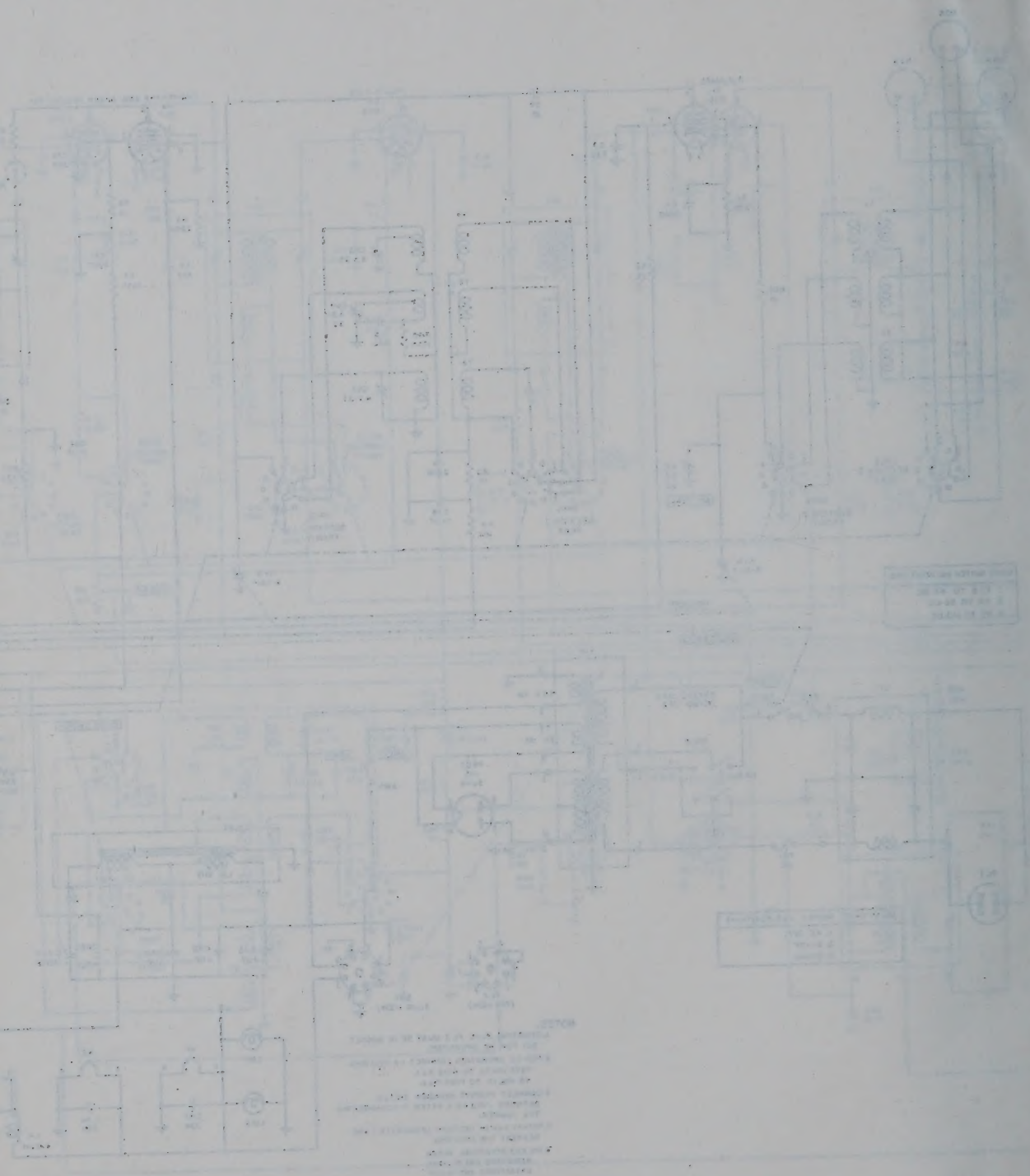

balance cannot be obtained, it is an indication that the secondary of transformer T14 is detuned off-center. A very slight adjustment of the capacitor across the secondary of T14, in either direction, will be required to permit the condition of balance to be reached. Balance is established when the signal generator is detuned to each side of resonance, and the maximum output peaks are equal. This also determines the correct setting for the variable trimmer capacitor across the secondary of T14. A misadjustment of this capacitor will cause f-m signals to be distorted.

## 64. Alinement of R-F Stage
(figs. 24, 25, 26, 29, and 31)

To aline the r-f stage, the panel controls must remain in the positions indicated in paragraph 62 except that the BAND SWITCH is changed to band 1, and the A.M.-F.M. switch is changed to A.M. position. Disconnect the signal generator from tube V2 and the chassis. Replace the grid clip on tube V2. Connect the high side of the signal generator, through the dummy antenna, to terminal B (which connects to the rotor arm of switch SW1A). Connect the low side of the signal generator to terminal A. This is a common connection of the primaries of transformers T1, T2, and T3 (fig. 26). With the signal generator connected in this manner, BAND SWITCH SW1 may be used to shift the signal of the signal generator to each band being alined.

*a. Band 1 Alinement* (figs. 24 and 26).
(1) Tune the signal generator and the receiver to 42 mc.
(2) Adjust capacitor C66 for maximum signal strength (C66 is across T7).
(3) Adjust capacitor C–63 for maximum signal strength.
(4) On this band, h-f oscillator transformer T7 is tuned 5.25 mc higher than antenna transformer T1 and r-f transformer T4. Because of this, retune the signal generator and the receiver to 28 mc, and adjust capacitor C58 for maximum output. Rock the TUNING control (capacitor C1) while making the adjustment.

*b. Band 2 Alinement* (figs. 24 and 25).
(1) Set BAND SWITCH SW1 at band 2
(2) Tune the signal generator and the receiver to 75 mc.
(3) Adjust capacitor C67 for maximum signal strength.
(4) Adjust capacitor C64 and ANTENNA trimmer C2 for maximum signal strength while rocking the TUNING control (capacitor C1).
(5) Readjust capacitor C67 for peak output.
(6) On this band, h-f oscillator transformer T8 is tuned 5.25 mc lower than antenna transformer T2 and r-f transformer T5. No low-frequency adjustment is provided on this band.

*c. Band 3 Alinement* (figs. 24 and 31).
(1) Set BAND SWITCH SW1 at band 3.
(2) Tune the signal generator and the receiver to 120 mc.
(3) Adjust capacitor C65 (across transformer T6) and ANTENNA trimmer C2 for maximum response, rocking the TUNING control (capacitor C1) at the same time.
(4) It is not recommended that the frequency of oscillator transformer T9 be adjusted in the field. Should it be necessary to locate this transformer, however, it is the white wire winding on the coil directly beneath tube V15. One end of the winding is connected to a terminal on the coil form. The other end (free end) can be shifted slightly. This will change the frequency of the transformer. If this winding is moved from its original position, it should be cemented in place with low-loss cement when the adjustment is completed. If the frequency of oscillator transformer T9 is shifted, repeat the adjustment of capacitor C65 and ANTENNA trimmer C2 for maximum response while rocking the TUNING control (capacitor C1). On band 3, h-f transformer T9 is tuned 5.25 mc lower than the signal. No low-frequency adjustment is provided on this band.

# Section IV. FINAL TESTING

## 65. General

This section is intended as a guide for determining the quality of the repaired receiver. The minimum test requirements, outlined in the following paragraphs, may be performed by maintenance personnel with adequate test equipment

and the necessary skills. Repaired equipment meeting these requirements will furnish satisfactory operation.

## 66. Test Equipment Required

The test equipment required for testing the repaired equipment is listed in paragraph 52. Do not attempt to run performance checks unless the test equipment is equal or superior to that listed in paragraph 52.

## 67. Control Settings for Sensitivity Tests

*a.* The controls on the receiver should be set as follows:

| Control | Position |
|---|---|
| SELECTIVITY | SHARP. |
| A.M.-F.M. switch | A.M. |
| A.V.C. switch | OFF. |
| SEND-REC. switch | REC. |
| B.F.O. switch | OFF. |
| R.F. GAIN | Maximum (clockwise). |
| A.F. GAIN | Maximum (clockwise). |
| TONE switch | NORMAL. |
| A.N.L. switch | OFF. |
| ANTENNA trimmer | Maximum (clockwise). |

*b.* Connect the *high* side of the signal generator to the antenna terminal (terminal B). Use a shielded lead with a shielded noninductive 100-ohm resistor in series with it. Connect the other signal generator lead to terminal A (fig. 26).

*c.* Connect Output Meter TS–585A/U across one pair of output terminals on terminal board TS1. Match the output impedance of these terminals.

## 68. Signal Sensitivity Chart

The following chart contains the sensitivity of a-m, f-m, and c-w signals on bands 1, 2, and 3. The signal plus noise-to-noise ratio should not be less than 4 to 1.

| Signal type | A.M.-F.M. switch position | B.F.O. switch position | Signal input (uv) | Audio output (mw) |
|---|---|---|---|---|
| a-m | A. M. | OFF | 2 | 10 |
| c-w | A. M. | ON | 2 | 10 |
| f-m | F. M. | OFF | 4 | 10 |

## 69. A-M and C-W Intermediate-Frequency Selectivity

Put the A.M.-F.M. switch in the A.M. position. At 6 db (decibels) down from the peak of the selectivity curve, the bandwidth of the i-f amplifier should be 150 kc (kilocycles) ±20 per cent at the broad setting of the selectivity switch.

## 70. Bfo Selectivity

The pitch control should vary the beat frequency 5 kc above and below the intermediate frequency. With the B.F.O. switch in the ON position, an unmodulated signal of 100,000 μv (microvolts) applied to the antenna terminals will produce a receiver output of at least 1 watt.

## 71. AVC Sensitivity

With the A.V.C. switch in the ON position at signal inputs between 10 and 100,000 μv, the avc will limit the total variation of power output to 24 db, or less. The operation of the avc must be smooth throughout the entire range of the input voltages. It must not exhibit any pronounced deviation within this range.

## 72. Audio Output

The maximum output of the audio amplifier of the receiver at any pair of output terminals should not be less than 1 watt.

## 73. Dial Calibration

Maximum tuning calibration error should not be more than one scale division. The tuning dial resetability should be of such accuracy that, when approaching a selected test frequency from either the high-frequency or the low-frequency end of the dial, the error will not exceed one-half of one scale division.

## 74. Tuning Meter

With the R.F. GAIN control at maximum, in a-m reception, the tuning meter will indicate the relative strength of the signal. In f-m reception, the tuning meter will deflect each side of zero as the signal is tuned through. It will come to rest on zero when the signal is tuned in properly.

## 75. Operational Test

Perform an operational test to determine whether the receiver is operating properly. This test may be made by connecting the antenna to the receiver and tuning for a signal. If no signal is available, use a test transmitter. The signal should be clear and intelligible. All of the controls should function properly and quietly. Extraneous noises and intermittent or microphonic conditions should not be present when the receiver is tapped with a rubber mallet.

# CHAPTER 6

# SHIPMENT AND LIMITED STORAGE AND DEMOLITION TO PREVENT ENEMY USE

## Section I. SHIPMENT AND LIMITED STORAGE

### 76. Repacking for Shipment or Limited Storage

The exact procedure used in repacking the equipment for shipment or limited storage depends upon the material available and the conditions under which the equipment is to be shipped or stored. Reverse the packaging procedure in paragraph 11 as far as it is practicable.

### 77. Waterproofing and Weatherproofing

A dehydrating agent, such as silica gel, should be placed inside the chests. The chests should be protected with a waterproof paper barrier. Seal the seams of the paper barrier with waterproof sealing compound or tape. Pack the waterproofed chests in a padded wooden case. Use at least 3 inches of excelsior padding between the waterproofed chests and the packing case.

## Section II. DEMOLITION OF MATERIEL TO PREVENT ENEMY USE

### 78. General

The demolition procedures outlined in paragraph 79 are used to prevent the enemy from using or salvaging this equipment. Demolition of the equipment will be accomplished only upon order of the commander.

### 79. Methods of Destruction

*a. Smash.* Smash the controls, vacuum tubes, coils, switches, capacitors, and transformers. Use sledges, axes, handaxes, hammers, crowbars, or any heavy tools.

*b. Cut.* Cut the cords, wiring, and all cables. Use axes, handaxes, or machetes.

*c. Burn.* Burn cords, resistors, capacitors, coils, wiring, and technical manuals. Use gasoline, kerosene, oil, flame throwers, or incendiary grenades.

*d. Bend.* Bend panel, cabinet, and chassis.

*e. Explosives.* If explosives are necessary, use firearms, grenades, or TNT.

*f. Disposal.* Bury or scatter the destroyed parts. Dispose of them in slit trenches, fox holes, or other holes, or throw them into streams of water.

*g. Destroy.* Destroy everything.

# APPENDIX I

# REFERENCES

*Note.* For availability of items listed, check SR 310–20–3, SR 310–20–4 and SR 310–20–5. Check Department of the Army Supply Manual SIG 1 for Signal Corps Supply Manuals.

## 1. Army Regulations

| | |
|---|---|
| AR 380–5 | Military Security (Safeguarding Security Information). |
| AR 750–5 | Maintenance of Supplies and Equipment (Maintenance Responsibilities and Shop Operation). |

## 2. Supply Publications

| | |
|---|---|
| SB 11–6 | Dry Battery Supply Data. |
| SB 11–47 | Preparation and Submission of Requisitions for Signal Corps Supplies. |

## 3. Auxiliary Equipment and Test Equipment

| | |
|---|---|
| TM 11–487H | Directory of Signal Corps Equipments: Test Equipment |
| TM 11–2627 | Tube Tester I–177 and I–177–A. |
| TM 11–5017 | Output Meters TS–585A/U and TS–585B/U, |
| TM 11–5030 | Signal Generator TS–497A/URR. |
| TM 11–5527 | Multimeter TS–352/U. |

## 4. Painting, Preserving, and Lubrication

| | |
|---|---|
| TB SIG 13 | Moistureproofing and Fungiproofing Signal Corps Equipment. |
| TB SIG 69 | Lubrication of Ground Signal Equipment. |
| TM 9–2851 | Painting Instructions for Field Use. |

## 5. Camouflage, Decontamination, and Demolition

| | |
|---|---|
| FM 5–20 | Camouflage, Basic Principles. |
| FM 5–25 | Explosives and Demolitions. |
| TM 3–220 | Decontamination. |

## 6. Other Publications

| | |
|---|---|
| FM 24–18 | Field Radio Techniques. |
| FM 72–20 | Jungle Warfare. |
| SR 310–20–3 | Index of Training Publications. |
| SR 310–20–4 | Index of Technical Manuals, Technical Regulations, Technical Bulletins, Supply Bulletins, Lubrication Orders, and Modification Work Orders. |
| SR 310–20–7 | Index of Tables of Organization and Equipment, Reduction Tables, Tables of Allowances, Tables of Organization, and Tables of Equipment, and Type Tables of Distribution. |
| SR 310–20–5 | Index of Administrative Publications. |
| SR 700–45–5 | Unsatisfactory Equipment Report (Reports Control Symbol CSGLD–247). |
| SR 745–45–5<br>Navy Shipping Guide<br>Article 1850–4<br>AFR 71–4 | Report of Damaged or Improper Shipment (Reports Control Symbols CSGLD–66 (Army) and AF–MC–U2 (Air Force)). |
| TB SIG 4 | Methods for Improving the Effectiveness of Jungle Radio Communication. |
| TB SIG 25 | Preventive Maintenance of Power Cords. |
| TB SIG 54 | Working through Jamming with Frequency Modulated Radio Sets. |
| TB SIG 66 | Winter Maintenance of Signal Equipment. |
| TB SIG 72 | Tropical Maintenance of Ground Signal Equipment. |
| TB SIG 75 | Desert Maintenance of Ground Signal Equipment. |

| | |
|---|---|
| TB SIG 123 | Preventive Maintenance Practices for Ground Signal Equipment. |
| TB SIG 178 | Preventive Maintenance Guide for Radio Communication Equipment. |
| TB SIG 219 | Operation of Signal Equipment at Low Temperatures. |
| TB SIG 223 | Field Expedients for Wire and Radio. |
| TM 9–2857 | Storage Batteries, Lead-Acid Type. |
| TM 11–314 | Antennas and Antenna Systems. |
| TM 11–415 | Dry Batteries. |
| TM 11–430 | Batteries for Signal Communication, except those pertaining to Aircraft. |
| TM 11–455 | Radio Fundamentals. |
| TM 11–466 | Radar Electronics Fundamentals. |
| TM 11–483 | Suppression of Radio Noises. |
| TM 11–486 | Electrical Communication Systems Engineering. |
| TM 11–496 | Training Text and Applicatory Exercises for Amplitude-Modulated Radio Sets. |
| TM 11–660 | Introduction to Electronics. |
| TM 11–661 | Electrical Fundamentals (Direct Current). |
| TM 11–681 | Electrical Fundamentals (Alternating Current). |
| TM 11–4000 | Trouble Shooting and Repair of Radio Equipment |

# APPENDIX II

# IDENTIFICATION TABLE OF PARTS

## 1. Requisitioning Parts

The fact that a part is listed in this table is not sufficient basis for requisitioning the item. Requisitions must cite an authorized basis, such as a specific T/O&E, T/A, SIG 7&8, list of allowances of expendable material, or another authorized supply basis. The Department of the Army Supply Manual, applicable to the equipment covered in this manual is SIG 7&8–SCR–607. For an index of available supply manuals in the Signal portion of the Department of the Army Supply Manual, see the latest issue of SIG 1.

## 2. Identification Table of Parts for Radio Receivers BC–787–B and –C

| Ref symbol | BC–787–B | BC–787–C | Name of part and description | Function of part | Signal Corps stock No. |
|---|---|---|---|---|---|
| | | | RADIO RECEIVERS BC–787–B and BC–787–C: 27.8 to 143 mc freq range, 3 bands; 115/230 v ac, 60 cyc, single ph, 115 w; mtd in steel cabinet; 21¼″ lg x 14½″ wd x 9⁵⁄₁₆″ h o/a; 15 electron tubes; superheterodyne ckt. | For receiving a-m, f-m, and c-w communication. | 2C4787 |
| | | | TECHNICAL MANUAL TM 11–867 | ---------- | Order through AGO |
| M1---------- | (*) | | AMMETER: dc; 160–0–40 μa, 2.82″ dia bbl. | Signal strength indicator-------- | 3F864–1 |
| | (*) | | CABLE ASSEMBLY, power, electrical: 2 cond No. 18 AWG stranded wire; 7′ lg excluding terminations. | A-c power input cable---------- | 3E4060 |
| | | (*) | CABLE ASSEMBLY, power, electrical: 2 cond No. 16 AWG stranded wire; 10′ 6″ lg o/a. | A-c power input cable---------- | 3E7350.1–10.11 |
| C3---------- | (*) | | CAPACITOR, fixed: ceramic dielectric; 5.75 μμf ±.75; 500 vdcw. | Band 1 fixed tuning---------- | 3D9005E75 |
| C7---------- | (*) | (*) | CAPACITOR, fixed: ceramic; 10 μμf ±1; 500 vdcw; JAN type CC21TJ100F. | Coupling h-f compensation between V1 and V2. | 3D9010–192 |
| C29---------- | | (*) | CAPACITOR, fixed: mica dielectric; 24 μμf ±5%; 500 vdcw; JAN type CM20B240J. | Coupling between V7 plate and T14 secondary. | 3K2024022 |
| C29---------- | (*) | | CAPACITOR, fixed: mica dielectric; 27 μμf ±10%; 500 vdcw; JAN type CM20B270K. | Coupling between V7 plate and T14 secondary. | 3K2027021 |
| C20, C31. | (*) | (*) (*) | CAPACITOR, fixed: mica dielectric; 47 μμf ±10%; 500 vdcw; JAN type CM20B470K. | C20: T12 to V5 grid coupling. C31: V8 cathode bypass (pin 8). | 3K2047021 |
| C56---------- | (*) | (*) | CAPACITOR, fixed: ceramic dielectric; 51 μμf ±5%; 500 vdcw; JAN type CC21UR510J. | V15 plate coupling---------- | 3D9051–20 |

| Ref symbol | BC-787-B | BC-787-C | Name of part and description | Function of part | Signal Corps stock No. |
|---|---|---|---|---|---|
| C24, C26. | (*) | (*) | CAPACITOR, fixed: mica dielectric; 56 μμf ±10%; 500 vdcw; JAN type CM20B560K. | Second detector load l-f bypass | 3K2056021 |
| C27 | (*) | (*) | CAPACITOR, fixed: mica dielectric; 100 μμf ±10%; 500 vdcw; JAN type CM20B101K. | V7 grid circuit avc filter | 3K2010121 |
| C39 | (*) | | CAPACITOR, fixed: mica dielectric; 150 μμf ±10%; 500 vdcw; JAN type CM25B151K. | V12 plate tone control circuit | 3K2515121 |
| C84 | | (*) | CAPACITOR, fixed: mica dielectric; 270 μμf ±10%; 500 vdcw; JAN type CM20B271K. | Band 1 fixed padder for transformer T7. | 3K2027121 |
| C3, C5, C9. C10, C45, C46, C47. | (*) | (*) | CAPACITOR, fixed: mica dielectric; 330 μμf ±10%; 500 vdcw; JAN type CM20B331K. | C3: T5 secondary fixed padder. C5: V1 screen r-f bypass. C9: V2 cathode coupling. C10: V2 screen r-f bypass. C45: V15 filament r-f bypass. C46: V2 filament r-f bypass. C47: V1 filament, and LM1, and LM2 r-f bypass. | 3K2033121 |
| C55, C79. | (*) (*) | | CAPACITOR, fixed: mica dielectric; 150 μμf ±10%; 500 vdcw; JAN type CM25B151K. | C55: V15 plate circuit decoupling. C79: Audio output linefilter. | 3K2515121 |
| C28, C32. | (*) | (*) | CAPACITOR, fixed: mica dielectric; 560 μμf ±10%; 500 vdcw; JAN type CM25B561K. | C28: avc filter. C32: Part of h-f compensating | 3K3056121 |
| C34, C57. | (*) | (*) (*) | CAPACITOR, fixed: mica dielectric; 1000 μμf ±10%; 500 vdcw; JAN type CM25B102K. | C34: V12 grid h-f audio bypass. C57: V15 grid coupling. | 3K2510221 |
| C12, C16. | | (*) | CAPACITOR, fixed: ceramic dielectric; 1000 μμf; 600 vdcw. | C12: V3 avc filter. C16: V4 avc filter. | 3DA1-333 |
| C35 | (*) | | CAPACITOR, fixed: mica dielectric; 1800 μμf ±%; 500 vdcw; JAN type CM30B182K. | V12 plate tone control circuit | 3K3018221 |
| C4, C6, C52, C61. | (*) | (*) | CAPACITOR, fixed: mica dielectric; 2200 μμf ±10%; 500 vdcw; JAN type CM30B222K. | C4: V1 cathode r-f bypass. C6: V1 plate circuit decoupling. C52: V14 plate circuit decoupling. C61: V2 screen circuit decoupling. | 3K3022221 |
| C8, C11, C13, C14, C15, C17, C18, C19, C21, C22, C23, C30, C33, C34, C36, C37, C41. | (*) | | CAPACITOR, fixed: mica dielectric; 8200 μμf ±10%; 500 vdcw; JAN type CM40B822K. | C8: Avc filter. C11 and C37: V9 coupling to V11. C13: V3 cathode circuit r-f bypass. C14: V3 screen r-f bypass. C15: V3 plate circuit decoupling. C17: V4 cathode circuit r-f bypass. C18: V4 screen r-f bypass. C19: V4 plate circuit decoupling. C21: V5 cathode r-f bypass. C22: V5 screen r-f bypass. C23: V5 plate circuit decoupling. C30: V7 plate circuit decoupling. C33: V9 grid (pin 1) coupling. C34: Part of tone control. C36 and C41: V9 coupling to V12. | 3K4082221 |

| Ref symbol | BC-787-B | BC-787-C | Name of part and description | Function of part | Signal Corps stock No. |
|---|---|---|---|---|---|
| C62, C78. | | | | C62: V2 plate circuit decoupling. C78: V1 plate circuit decoupling. | |
| C33, C36, C37, C78. | | (*) | CAPACITOR, fixed: paper dielectric; 10,000 μμf ±20%; 600 vdcw; JAN type CN35A103M. | C33: V9 grid (pin 1) coupling. C36: V9 plate coupling to V12. C37: V9 plate coupling to V11. C78: V1 plate circuit decoupling. | 3DA10–367 |
| C8, C13, C14, C15, C17, C18, C19, C21, C22, C23, C30, C62. | | (*) | CAPACITOR, fixed: ceramic dielectric; 10,000 μμf +80% −20%; 450 vdcw. | C8: Avc filter. C13: V3 cathode r-f bypass. C14: V3 screen r-f bypass. C15: V3 plate circuit decoupling. C17: V4 cathode circuit r-f bypass. C18: V4 screen r-f bypass. C19: V4 plate circuit decoupling. C21: V5 cathode r-f bypass. C22: V5 screen r-f bypass. C23: V5 plate circuit decoupling. C30: V7 plate decoupling and screen circuits. C62: V2 plate circuit decoupling. | 3DA10–514 |
| C25 | (*) | | CAPACITOR, fixed: paper dielectric; 50,000 μμf ±10%; 600 vdcw; JAN type CP53B1EF503K. | C25: Part of V6 noise limiting network. | 3DA50–303 |
| C40 | (*) | | CAPACITOR, fixed: paper dielectric; 500,000 μμf +20% −10%; 600 vdcw; JAN type CP53B1EF504V. | B+ filter | 3DA500–451 |
| C25, C35. | | (*) | CAPACITOR, fixed: paper dielectric; 50,000 μμf +40% −15%; 600 vdcw; JAN type CP53B1EF503X. | C25: Part of noise limiting network. C35: Part of tone control circuit. | 3DA50–378 |
| C43, C44, C83. | | (*) | CAPACITOR, fixed: paper dielectric; 4 μf ±10%; 600 vdcw; JAN type CP41B1DF405K. | B+ filters | 3DB4–224 |
| C42, C43, C44. | (*) | | CAPACITOR, fixed: electrolytic; 3 sect., 2 sect. ea 8 μf +20% −10%, 1 sect. 4 μf +20% −10%; 650 vdcw ea sect. | D-c filters | 3DB8–114 |
| C38 | (*) | | CAPACITOR, fixed: electrolytic; 20 μf +75% −10%; 25 vdcw. | V11 and V12 cathode a-f bypass | 3DB20–43 |
| C38, C40. | | (*) | CAPACITOR, fixed; electrolytic; 25 μf; 25 vdcw; JAN type CE63C250F | C38: V9 cathode bypass a-f (pin 3). C40: V9 cathode bypass a-f (pin 6). | 3DB25–79 |
| C66, C67. | | (*) | CAPACITOR, variable: glass dielectric; concentric type, single sect.; 1.5 to 10 μμf. | C66: T7 secondary trimmer. C67: T8 secondary trimmer. | 3D9010V–51 |
| C2 | (*) | | CAPACITOR, variable: air dielectric; plate meshing type; 3 to 25 μμf. | ANTENNA tuning | 3D902.3V–1 |
| C42A, C42B. | | (*) | CAPACITOR, fixed: paper dielectric; 2 sect.; 40 μf ea sect.; 350 vdcw ea sect.; JAN type CE42C400P. | B+ filter | 3DB40–81 |
| C60 | (*) | | CAPACITOR, variable; air dielectric; plate meshing type; 3.5 to 23 μμf. | PITCH CONTROL | 3D9025V–1 |
| C2, C60. | | (*) | CAPACITOR, variable: air dielectric; plate meshing type; single sect.; 3.5 μμf min to 23 μμf max. | C2: ANTENNA tuning. C60: PITCH CONTROL. | 3D9023V–15 |

| Ref symbol | BC-787-B | BC-787-C | Name of part and description | Function of part | Signal Corps stock No. |
|---|---|---|---|---|---|
| C63 | (*) | | CAPACITOR, variable: ceramic dielectric; ceramic; 3 to 50 μμf. | C63: T4 secondary trimmer | 3D9050V-67 |
| C63, C64, C65. | | (*) | CAPACITOR, variable: ceramic dielectric; 4.5 to 25 μμf; JAN type CV11A250. | C63: T4 secondary trimmer. C64: T5 secondary trimmer. C65: T6 secondary trimmer. | 3D9025V-82 |
| C1A, C1B, C1C. | | (*) | CAPACITOR, variable: air dielectric; plate meshing type; 3 sect.; 6 μμf min per sect., 54.7 μμf max per sect. | TUNING control | 3D9054VE7-2 |
| C58 | | (*) | CAPACITOR, variable: ceramic; 20 to 125 μμf; JAN type CV12D121. | T7 padder | 3D9125V-5 |
| C58 | (*) | | CAPACITOR, variable: mica dielectric; 400 to 550 μμf. | T7 padder | 3D9500V-5 |
| | | (*) | CLAMP, electrical: electron tube; accom matl 2¼" max dia. | Holds V13 | 2Z2642.398 |
| | | (*) | CLAMP, electrical: electron tube; accom matl 2½" max dia. | Holds V10 | 2Z2643.138 |
| | | (*) | CLAMP, electrical: used to hold cabled wiring in place; accom matl ⅛" dia. | Holds cable wiring stationary | 2Z2642.411 |
| | | (*) | CLIP, electrical: acorn tube | Plate and grid clip for tubes V1 and V2. | 2Z2727-14 |
| | | (*) | CLIP, electrical: ferrule style No. 1; holds ¼" dia matl. | Holds spare fuse | 3Z1013.13 |
| | | (*) | CLIP, electrical: Fahnestock style No. 2; 3/32" max jaw opening. | Holds spare Allen-Bradley wrench. | 3Z1090 |
| L1 | (*) | | COIL, RF: choke; unshielded | V15 plate circuit r-f choke | 3C1081-13F |
| L1 | | (*) | COIL, RF: choke, unshielded | V15 plate circuit r-f choke | 3C375-57 |
| L4 | (*) | | COIL, RF: choke unshielded | V15 filament r-f choke | 3C1081-13G |
| L4 | | (*) | COIL, RF: choke; unshielded | V15 filament r-f choke | 3C375-55 |
| L5 | | (*) | COIL, RF: bfo; shielded, rectangular aluminum can. | Bfo tank coil | 3C1081-13R |
| L5 | (*) | | COIL ASSEMBLY, RF: bfo; shielded metal can. | Bfo tank coil | 2Z9644.19 |
| SO2, SO3, SO4. | (*) | (*) | CONNECTOR, receptacle: Radio Frequency Receptacle UG-103/U, Socket SO-264; 2 round female cont; pol; straight. | Antenna connector | 2Z7390-103 |
| PL2 | (*) | | CONNECTOR, plug: 8 round pol male cont; straight type. | Shorting plug for a-c and d-c operation. | 2Z3069 |
| PL2 | | (*) | CONNECTOR, plug: 8 round pol male cont; straight type. | Shorting plug for a-c and d-c operation. | 2Z3028-66 |
| | | (*) | COUPLING, flexible: shaft; c/o 2 brass hubs and phosphor bronze ring. | Couples tuning control to dial assembly. | 2Z3295-158 |
| | | (*) | COUPLING, flexible: shaft; c/o plastic washer and 2 brass shaft hubs. | Coupling for ANTENNA tuning control. | 2Z3295-159 |
| | | (*) | COUPLING, flexible: shaft; c/o phosphor bronze ring and 2 brass hubs. | Couples A.F. GAIN control to extension shaft. | 2Z3295-160 |
| | (*) | (*) | DIAL: round, black bakelite; for shaft ¼" dia. | BAND SWITCH knob | 2Z5849.9 |
| | | (*) | DIAL, control: round; indicating arrow; ¼" dia shaft coupling. | BAND SWITCH control | 2Z3723-310 |
| | (*) | (*) | DIAL, control: round; black bakelite; for ¼" shaft; marked 5 to 0 to 5 over 180°. | PITCH CONTROL dial | 2Z5842-33 |

| Re symbol | BC–787–B | BC–787–C | Name of part and description | Function of part | Signal Corps stock No |
|---|---|---|---|---|---|
| | (*) | (*) | DIAL, control: round; black bakelite; for ¼″ dia shaft; silver numerals 0 to 9 cw 117 to 180° range. | ANTENNA tuning dial | 2Z5842–32 |
| | | (*) | DIAL, control: round, 9 to 0 cw, graduated in increments of 1, marked w/cir line; ¼″ dia shaft coupling. | R.F. GAIN control knob | 2Z3723–311 |
| | | (*) | DIAL, control: round; triangular shape pointer; ¼″ dia shaft coupling. | A.M.-F.M. switch control knob and SELECTIVITY switch control knob. | 2Z5849.17 |
| | (*) | | DIAL, control: round; black bakelite; for ¼″ shaft. | BAND SWITCH knob | 2Z5842–31 |
| | | (*) | DIAL, control: tone control marked "Low," "Normal," "High Fid," "Bass Boost." | TONE control knob | 2Z5849.18 |
| | (*) | | DIAL, scale: white lamicoid; 0 to 100 in 360°. | Logging dial | 2Z3764.13 |
| | | (*) | DIAL, scale: main tuning dial | Main tuning dial scale | 2Z3723–331 |
| | (*) | | DIAL, scale: white lamicoid; black figures; 4 scale, 0–28, 82–153, 48–82, 28–48 mc. | Main tuning dial scale | 2Z3723–11 |
| | | (*) | DIAL, scale: disk type | Logging dial | 2Z3764.79 |
| | (*) | | FASTENER: trunk | Used with Mounting FT–377–A | 6Z1747–10 |
| FS1 | (*) | | FUSE FU–27: cartridge; 2 amp | A-c power fuse | 3Z1927 |
| FS1, FS2. | | (*) | FUSE FU–50: 3 amp | A-c power fuses | 3Z1950 |
| | (*) | | FUSEHOLDER: extractor post type; accom single 3AG fuse. | Holds fuse FS1 | 3Z3275 |
| | | (*) | FUSEHOLDER: extractor post type; accom single 3 AG cartridge fuse. | Holds fuses FS1 and FS2 | 3Z3285–6.7 |
| | (*) | | HOOD M–360: for socket SO–264 | Shield for antenna receptacle | 2Z7390–106 |
| J1 | (*) | | JACK, telephone: for 2 cond plug; 1⅛″ x 1 11/32″ x 1 29/32″ o/a. | PHONES jack | 2Z5581–24 |
| J1 | | (*) | JACK, telephone: for 2 cond plug, .250″ dia, 1 3/32″ lg. | PHONES jack | 2Z5598–35 |
| | (*) | | KNOB: round; black balelite; marked w/arrow on skirt. | BAND SWITCH knob | 2Z5842–34 |
| LM1, LM2. | (*) | (*) | LAMP, LM–27: 6 to 8 v; .25 amp; miniature bayonet base. | Dial lamps | 2Z5927 |
| | (*) | (*) | LIGHT, panel: miniature bayonet | Holds LM–27 and LM–52 | 2Z5883–241 |
| M1 | | (*) | METER, S units: dc; 200 μa for full scale deflection. | Indicates signal strength | 3F3318–1 |
| | (*) | | MOUNTING FT–377–A | For mounting Radio Receiver BC–787–B. | 2Z6721–377 |
| | | (*) | MOUNTING: post part of clamp for securing electron tube. | Secures V13 and V10 in sockets | 2Z6820.369 |
| | | (*) | MOUNTING: post part of clamp for securing electron tube. | Secures V13 and V10 in sockets | 2Z6820.368 |
| | | (*) | MOUNTING MT–1079/FR | For mounting Radio Receiver BC–787–C. | 2Z6762A–3 |
| | (*) | | POST, binding: Binding Post TM–144; screw type. | For 500–600–5000-ohm impedance connection. | 3Z244 |
| | | (*) | POST, binding: screw type | For 500–600–5000-ohm impedance connection. | 3Z741–31 |
| L6, L7. | (*) | | REACTOR: filter choke; dual; No. 1 sect., 3 hy, 150 ma, No. 2 sect., 12 hy, 90 ma; No. 1 sect., 85 ohm dc resistance, No. 2 sect., 250 ohm dc resistance. | B+ filter chokes | 3C375–15 |

| Ref symbol | BC-787-B | BC-787-C | Name of part and description | Function of part | Signal Corps stock No. |
|---|---|---|---|---|---|
| L6,<br>L7. | | (*) | REACTOR: 2 sect.; No. 1 sect., 3 hy +30% −10%, 150 ma, 85 ohm dc resistance ±10%; No. 2 sect., 12 hy +20% −10%, 90 ma 215 ohm dc resistance ±10% HS metal case. | B+ filter chokes | 3C547-33 |
| R66 | | (*) | RESISTOR, fixed: comp; 5.6 ohms ±10%; ½ w; JAN type RU3B5R-6K. | V15 grid circuit attenuator (band 3). | 3RU13604 |
| R66 | (*) | | RESISTOR, fixed: comp; 6 ohms; ±10%; ½ w. | V15 grid circuit attenuator (band 3). | 3Z5996-15 |
| R68 | (*) | (*) | RESISTOR, fixed: comp; 8.2 ohms ±10%; ½ w; JAN type RU3B8R-2K. | R68: V15 grid circuit attenuator (band 2). | 3RU15203 |
| R9,<br>R16,<br>R23,<br>R26. | (*) | (*) | RESISTOR, fixed: comp; 10 ohms ±10%; ½ w; JAN type RC20BF-100K. | R9: First i-f frequency band expander.<br>R16: Second i-f frequency band expander.<br>R23: Third i-f frequency band expander.<br>R26: V1 parasitic suppressor. | 3RC20BF100K |
| R17,<br>R18,<br>R55,<br>R65,<br>R57. | (*)<br>(*)<br>(*) | (*) | RESISTOR, fixed: comp; 33 ohms ±10%; ½ w; JAN type RC20BF-330K. | R17: V3 cathode degeneration.<br>R18: V5 parasitic suppressor.<br>R55: V4 cathode degeneration.<br>R65: V15 grid circuit attenuator limiter (band 1).<br>R57: S meter shunt. | 3RC20BF330K |
| R57 | | (*) | RESISTOR, fixed: comp; 15 ohms ±5%; ½ w; JAN type RC20BF-150J. | *S* meter shunt | 3RC20BF150J |
| R12,<br>R27,<br>R13,<br>R20. | (*)<br>(*) | (*)<br>(*) | RESISTOR, fixed: comp; 120 ohms ±10%; ½ w; JAN type RC20BF-121K. | R12: Part of tone control circuit.<br>R27: V5 plate circuit decoupling.<br>R13: V3 cathode bias.<br>R20: V4 cathode bias. | 3RC20BF121K |
| R70 | | (*) | RESISTOR, fixed: comp; 220 ohms ±10%; ½ w; JAN type RC20BF-221K. | V2 plate circuit parasitic suppressor. | 3RC20BF221K |
| R52,<br>R70. | (*)<br>(*) | (*) | RESISTOR, fixed: comp; 220 ohms ±5%; 2 w; JAN type RC42BE-221J. | R52: V11 and V12 cathode bias.<br>R70: V2 plate parasitic suppressor. | 3RC42BE221J |
| R1 | (*) | (*) | RESISTOR, fixed: comp; 270 ohms ±10%; ½ w; JAN type RC20BF-271K. | V1 cathode bias | 3RC20BF271K |
| R15,<br>R22,<br>R25.<br>R62,<br>R67. | (*) | (*)<br>(*) | RESISTOR, fixed: comp; 330 ohms ±10%; ½ w; JAN type RC20BF-331K. | R15: V3 plate circuit decoupling.<br>R22: V4 plate circuit decoupling.<br>R25: V5 cathode bias.<br>R62: V15 plate circuit decoupling.<br>R67: V2 plate circuit decoupling. | 3RC20BF331K |
| R2,<br>R3,<br>R6,<br>R21,<br>R67,<br>R27. | (*)<br>(*)<br>(*) | (*) | RESISTOR, fixed: comp; 1000 ohms ±10%; ½ w; JAN type RC20BF-102K. | R2: V1 screen voltage dropping.<br>R3: V1 plate decoupling.<br>R6: V2 screen voltage dropping.<br>R21: V4 screen voltage dropping.<br>R67: V2 plate circuit decoupling.<br>R27: V5 plate circuit decoupling. | 3RC20BF102K |
| R5,<br>R29, | (*) | (*) | RESISTOR, fixed: comp; 2200 ohms ±10%; ½ w; JAN type RC20BF- | R5: V2 cathode bias.<br>R29: V7 plate and screen circuits | 3RC20BF222K |

| Ref symbol | BC–787–B | BC–787–C | Name of part and description | Function of part | Signal Corps stock No. |
|---|---|---|---|---|---|
| R72. | | (*) | 222K. | decoupling.<br>R72: V3 cathode bias. | |
| R59 | | (*) | RESISTOR, fixed: WW; 3100 ohms ±5%; 11 w; JAN type RW33J312. | V10 current limiting | 3RW27349 |
| R59 | (*) | | RESISTOR, fixed: WW; 3200 ohms ±5%; 10 w. | V10 current limiting | 3Z6320–7 |
| R46,<br>R47. | | (*) | RESISTOR, fixed: comp; 3300 ohms ±10%; ½ w; JAN type RC20BF-332K. | V9 cathode bias | 3RC20BF332K |
| R53 | | (*) | RESISTOR, fixed: comp; 3900 ohms ±10%; 2 w; JAN type RC42BE-392K. | Part of tone control circuit | 3RC42BE392K |
| R46,<br>R47,<br>R63. | (*)<br><br>(*) | <br><br>(*) | RESISTOR, fixed: comp; 4700 ohms ±10%; ½ w; JAN type RC20BF-472K. | R46 and R47: V9 cathode bias.<br>R63: P/O V15 plate load. | 3RC20BF472K |
| R28 | | (*) | RESISTOR, fixed: WW; 7100 ohms ±5%; 11 w; JAN type RW33J712. | P/o V1, V5, and V7 voltage divider. | 3RW29424 |
| R28 | (*) | | RESISTOR, fixed: WW; 7500 ohms ±5%; 10 w. | V1, V5, and V7 screen voltage dropping. | 3Z6575–28 |
| R4 | (*) | (*) | RESISTOR, fixed: comp; 10,000 ohms ±5%; 2 w; JAN type RC42BE103J. | V1 plate dropping | 3RC42BE103J |
| R37,<br>R69,<br>R71. | (*) | (*)<br>(*) | RESISTOR, fixed: comp; 15,000 ohms ±10%; ½ w; JAN type RC20BF153K. | R37: V7 plate load damping.<br>R69: Part of tone control circuit.<br>R71: V8 tank damping. | 3RC20BF153K |
| R75 | | (*) | RESISTOR, fixed: comp; 18,000 ohms ±10%; ½ w; JAN type RC20BF183K. | V5 screen voltage dropping | 3RC20BF183K |
| R64 | (*) | (*) | RESISTOR, fixed: comp; 22,000 ohms ±10%; ½ w; JAN type RC20BF223K. | V15 grid leak bias | 3RC20BE223K |
| R60,<br>R30. | (*) | (*) | RESISTOR, fixed: comp; 22,000 ohms ±10%; 2 w; JAN type RC42BE223K. | R60: V14 plate circuit decoupling<br>R30: V7 screen and plate voltage bleeder. | 3RC42BE223K |
| R14 | (*) | (*) | RESISTOR, fixed: comp; 39,000 ohms ±10%; ½ w; JAN type RC20BF393K. | V3 screen voltage dropping | 3RC20BF393K |
| R61,<br>R31,<br>R53,<br>R54. | <br>(*)<br>(*) | (*)<br>(*) | RESISTOR, fixed: comp; 47,000 ohms ±10%; ½ w; JAN type RC20BF473K. | R61: V14 grid d-c return.<br>R31: Part of second detector filter circuit.<br>R53 and R54: Part of tone control circuit. | 3RC20BF473K |
| R38 | (*) | (*) | RESISTOR, fixed: comp; 56,000 ohms ±10%; ½ w; JAN type RC20BF563K. | V7 grid d-c return | 3RC20BF563K |
| R7,<br>R33,<br>R40,<br>R41,<br>R51,<br>R48,<br>R19. | (*) | (*)<br><br><br><br><br>(*) | RESISTOR, fixed: comp; 100,000 ohms ±10%; ½ w; JAN type RC20BF104K. | R7: V2 screen circuit decoupling<br>R33: P/o A.N.L. and detector circuit.<br>R40 and R41: V8 load.<br>R51: V9 grid d-c return.<br>R48: V2 grid d-c return (band 2).<br>R19: V4 grid circuit decoupling. | 3RC20BF104K |
| R34, R36,<br>R39,<br>R42,<br>R44, R45,<br>R49,<br>R50. | (*) | (*)<br><br><br>(*) | RESISTOR, fixed: comp; 220,000 ohms ±10%; ½ w; JAN type RC20BF224K. | R34 and R36: V6 load.<br>R39: V7 grid d-c return.<br>R42: V8 output low-pass filter.<br>R44 and R45: V9 plate load.<br>R49: V11 grid d-c return.<br>R50: V12 grid d-c return. | 3RC20BF224K |

| Ref symbol | BC–787–B | BC–787–C | Name of part and description | Function of part | Signal Corps stock No. |
|---|---|---|---|---|---|
| R24,<br>R35,<br>R56, | (*) | (*) | RESISTOR, fixed: comp; 470,000 ohms ±10%; ½ w; JAN type RC20BF474K. | R24: V5 grid d-c return.<br>R35: Avc filter.<br>R56: Meter M1 current limiter. | 3RC20BF474K |
| R42,<br>R44,<br>R45,<br>R49,<br>R50. | | (*) | | R42: P/o h-f compensating circuit.<br>R44 and R45: V9 plate load.<br>R49: V11 grid d-c return.<br>R50: V12 grid d-c return. | |
| R12,<br>R32. | (*)<br>(*) | (*) | RESISTOR, fixed: comp; 1 meg ±10%; ½ w; JAN type RC20BF105K. | R12: Part of tone control circuit (bass boost).<br>R32: Part of noise limiting network. | 3RC20BF105K |
| R8,<br>R69. | (*) | | RESISTOR, fixed: comp; 1.5 meg ±10%; ½ w; JAN type RC21BF155K. | R8: Part of tone control circuit (bass boost).<br>R69: Part of tone control circuit (high fidelity). | 3RC21BF155K |
| R11 | (*) | | RESISTOR, variable: WW; 1500 ohms ±20%; 3 w; JAN type RA25A1SA152AK. | R11: R.F. GAIN control | 3RA6011 |
| R58 | | (*) | RESISTOR, variable: WW; 1500 ohms ±10%; 2 w; JAN type RA20A1SA152AK. | METER ADJ. control | 3RA6004 |
| R11 | | (*) | RESISTOR, variable: comp; 10,000 ohms ±20%; ½ w. | R.F. GAIN control | 3Z7410–194 |
| R43 | (*) | (*) | RESISTOR, variable: comp; 1 meg ±20%; ½ w. | A.F. GAIN control | 3Z7499–1.133 |
| | (*) | | SHAFT, switch: steel; cad finish; for wave change sw. | Shaft for BAND SWITCH SW1 | 2Z8202.24 |
| | (*) | | SOCKET, electron tube: 5 cont; ceramic; acorn type. | For tubes V1, V2 and V15 | 2Z8675.41 |
| X1,<br>X2,<br>X15. | | (*) | SOCKET, electron tube: 5 cont; acorn type; above chassis mtg. | X1: Mounting for V1.<br>X2: Mounting for V2.<br>X15: Mounting for V15. | 2Z8675.102 |
| X3 through X14 | | (*) | SOCKET, electron tube: octal; 1 piece, under chasis mtg; JAN type TSB8T101. | X3 through X14: Mounting for V4 through V14. | 2Z8678.326 |
| LF1 | (*) | (*) | SUPPRESSOR, electrical noise: capacitor and coil type; 4 capacitors, 8200 μμf ea ±10%, 300 v dc; 2 coils 46 μh ea. | A-c power input filter | 3Z1894–17 |
| SW1A,<br>SW1G. | | (*) | SWITCH, rotary: 1 pole, 3 positions | SW1A: Antenna primary section of BAND SWITCH.<br>SW1G: Oscillator plate section of BAND SWITCH. | 3Z9903E–3.54 |
| SW1B,<br>SW1D,<br>SW1E. | | (*) | SWITCH, rotary: 1 pole, 3 positions | SW1B: Antenna secondary section of BAND SWITCH.<br>SW1D: R-f secondary section of BAND SWITCH.<br>SW1E: V2 cathode section of BAND SWITCH. | 3Z9903E–3.55 |
| SW1C | | (*) | SWITCH, rotary: 1 pole, 3 positions | R-f primary section of BAND SWITCH. | 3Z9903E–3.56 |
| SW1F | | (*) | SWITCH, rotary: 1 pole, 3 positions | Oscillator grid section of BAND SWITCH. | 3Z9903E–3.57 |
| SW9 | (*) | | SWITCH, rotary: 3 pole, 4 positions, 4 throws. | TONE switch | 3Z9825–62.64 |
| SW8 | | (*) | SWITCH, rotary: 4 pole, 2 positions, 2 throws; single sect. | A.M.-F.M. switch | 3Z9825–62.63 |

| Ref symbol | BC-787-B | BC-787-C | Name of part and description | Function of part | Signal Corps stock No. |
|---|---|---|---|---|---|
| SW9 | | (*) | SWITCH, rotary: 3 pole, 4 throws | TONE switch | 3Z9825–62.579 |
| SW8A through SW8D. | (*) | | SWITCH, rotary: 4 pole, 2 throws | A.M.-F.M. switch | 3Z9825–62.578 |
| SW7A through SW7E. | | (*) | SWITCH, rotary: 6 pole, 3 positions, 3 sect. | SELECTIVITY-A.C. OFF switch. | 3Z9825–62.577 |
| SW1B, SW1D | (*) | | SWITCH SECTION, rotary: ceramic | BAND SWITCH wafer | 3Z9903E–11.3 |
| SW1F | (*) | | SWITCH SECTION, rotary: ceramic | BAND SWITCH wafer | 3Z9903E–11.4 |
| SW1A, SW1G | (*) | | SWITCH SECTION, rotary: ceramic | BAND SWITCH wafer | 3Z9903E–11.5 |
| SW1C | (*) | | SWITCH SECTION, rotary: ceramic | BAND SWITCH wafer | 3Z9903E–11.6 |
| SW2, SW4, SW5. | (*) | | SWITCH, toggle: SPST | SW2: B.F.O. switch. SW4: A.V.C. switch. SW5: SEND-REC. switch. | 3Z9858–8.22 |
| SW2, SW4, SW5. | | (*) | SWITCH, toggle: SPST; JAN type ST42A. | SW2: B.F.O. switch. SW4: A.V.C. switch. SW5: SEND-REC. switch. | 3Z9863–42A |
| SW10 | (*) | | SWITCH, toggle: DPDT | A-c power switch | 3Z9858–3.2 |
| SW10 | | (*) | SWITCH, toggle: DPDT; JAN type ST52N. | A-c power switch | 3Z9863–52N |
| SW6 | (*) | | SWITCH, toggle: DPST | A.N.L. switch | 3Z9849.92 |
| SW6 | | (*) | SWITCH, toggle: DPST; JAN type ST52K. | A.N.L. switch | 3Z9863–52K |
| | | (*) | TERMINAL BOARD: general purpose; 3 solder lug term.; 1⅜″ lg x ⅜″ wd x 27/64″ thk. | General purpose | 3Z770 3.57 |
| | | (*) | TERMINAL BOARD: general purpose; 3 solder lug term.; 1½″ lg x 5/16″ wd x 21/32″ thk. | General purpose | 3Z770–3.56 |
| TS1 | | (*) | TERMINAL BOARD: accom 6 term.; 3 1/16″ lg x 2 3/16″ wd x ⅛″ thk. | 500-, 600-, and 5,000-ohm output terminal board. | 3Z770–6.99 |
| | | (*) | TERMINAL BOARD: resistor mtg strip; 8 turret type term.; 2 3/16″ lg x 1¾″ wd x 11/16″ thk. | For resistors | 3Z770–8.83 |
| | | (*) | TERMINAL BOARD: resistor mtg strip; 8 turret type term.; 2 3/16″ lg x 1¾″ wd x 11/16″ thk. | For resistors | 3Z770–8.84 |
| | | (*) | TERMINAL BOARD: resistor mtg strip; 12 turret type term.; 3⅛″ lg x 1¾″ wd x 11/16″ thk. | For resistors | 3Z770–12.94 |
| | | (*) | TERMINAL BOARD: resistor mtg strip; 12 turret type term.; 3⅛″ lg x 1¾″ wd x 11/16″ thk. | For resistors | 3Z770–12.93 |
| | | (*) | TERMINAL BOARD: resistor mtg strip; 16 turret type term.; 7¼″ lg x 1¾″ wd x 11/16″ thk. | For resistors | 3Z770–15.18 |
| | | (*) | TERMINAL BOARD: resistor mtg strip; 34 turret type term.; 6″ lg x 1¾″ wd x 11/16″ thk. | For resistors | 3Z770–34.20 |
| T15 | (*) | | TRANSFORMER, AF: plate coupling type; pri 12,000 ohms impedance, ct, No. 1 secd 5,000 ohms tapped at 500, and No. 2 secd 600 ohm ct. | Audio output transformer | 2Z9632.184 |
| T15 | | (*) | TRANSFORMER, AF: plate coupling type; pri 12,000 ohms impedance, No. 1 secd, 600 ohms impedance, No. 2 secd, 5000 ohms impedance; pri ct, No. 1 secd, ct, No. 2 | Audio output transformer | 2Z9632.634 |

| Ref symbol | BC-787-B | BC-787-C | Name of part and description | Function of part | Signal Corps stock No. |
|---|---|---|---|---|---|
| | | | secd, tapped for 500 ohms; pri rated 35 ma; HS metal case. | | |
| T14 | (*) | | TRANSFORMER, discriminator: 5.25 mc; shielded. | Discriminator transformer | 2Z9643.87 |
| T14 | | (*) | TRANSFORMER, discriminator: 5.25 mc; peak freq. | Discriminator transformer | 2Z9643.404 |
| T10 | (*) | | TRANSFORMER, IF: 5.25 mc; shielded. | V3 input transformer | 2Z9643.83 |
| T10 | | (*) | TRANSFORMER, IF: 5.25 mc; peak freq. | V3 input transformer | 2Z9643.400 |
| T11 | (*) | | TRANSFORMER, IF: 5.25 mc; shielded. | V4 input transformer | 2Z9643.84 |
| T11 | | (*) | TRANSFORMER, IF: 5.25 mc; peak freq. | V4 input transformer | 2Z9643.401 |
| T12 | (*) | | TRANSFORMER, IF: 5.25 mc; shielded. | V5 input transformer | 2Z9643.85 |
| T12 | | (*) | TRANSFORMER, IF: 5.25 mc; peak freq. | V5 input transformer | 2Z9643.402 |
| T13 | (*) | | TRANSFORMER, IF: 5.25 mc; shielded. | V6 input transformer | 2Z9643.86 |
| T13 | | (*) | TRANSFORMER, IF: 5.25 mc; peak freq. | V6 input transformer | 2Z9643.403 |
| T16 | (*) | | TRANSFORMER, power: step-up and step-down; fil and plate type; incl metal case. | Filament and plate voltage transformer. | 2Z9608–17 |
| T16 | | (*) | TRANSFORMER, power: step-up and step-down; fil and plate type; input 115 v ac-230 v ac, 50–60 cyc, single ph; 3 output wdg; secd #1, 540 v dc, ct, 150 ma; secd #2, 6.4 v ac, 4 amp; secd #3, 5.0 v ac, 3 amp; HS metal case. | Filament and plate voltage transformer. | 2Z9621–194 |
| T1 | (*) | | TRANSFORMER, RF: ant.; unshielded. | Band 1 antenna transformer | 2C4537–27/T1 |
| T1 | | (*) | TRANSFORMER, RF: ant.; unshielded. | Band 1 antenna transformer | 2Z9629–319 |
| T2 | (*) | | TRANSFORMER, RF: ant.; unshielded. | Band 2 antenna transformer | 2C4537–27/T4 |
| T2 | | (*) | TRANSFORMER, RF: ant.; unshielded. | Band 2 antenna transformer | 2Z9629–320 |
| T3 | (*) | | TRANSFORMER, RF: ant.; unshielded. | Band 3 antenna transformer | 2C4537–27/T7 |
| T3 | | (*) | TRANSFORMER, RF: ant.; unshielded. | Band 3 antenna transformer | 2Z9629–321 |
| T4 | (*) | | TRANSFORMER, RF: coupling; unshielded. | V1 output coupling for band 1 | 2C4180–44/C4 |
| T4 | | (*) | TRANSFORMER, RF: coupling; unshielded. | V1 output coupling for band 1 | 2Z9629–322 |
| T5 | (*) | | TRANSFORMER, RF: coupling; unshielded. | V1 output coupling for band 2 | 2C4180–44/C3 |
| T5 | | (*) | TRANSFORMER, RF: coupling; unshielded. | V1 output coupling for band 2 | 2Z9629–323 |
| T6 | (*) | | TRANSFORMER, RF: coupling; unshielded. | V1 output coupling for band 3 | 2C4180–44/C5 |
| T6 | | (*) | TRANSFORMER, RF: coupling; unshielded. | V1 output coupling for band 3 | 2Z9629–326 |
| T7 | (*) | | TRANSFORMER, RF: osc; unshielded. | V15 output coupling for band 1 | 2C4180–44/C1 |

| Ref symbol | BC–787–B | BC–787–C | Name of part and description | Function of part | Signal Corps stock No |
|---|---|---|---|---|---|
| T7 | | (*) | TRANSFORMER, RF: osc; unshielded. | V15 output coupling for band 1 | 2Z9629–325 |
| T8 | (*) | | TRANSFORMER, RF: osc; unshielded. | V15 output coupling for band 2 | 2Z4180–44/C2 |
| T8 | | (*) | TRANSFORMER, RF: osc; unshielded. | V15 output coupling for band 2 | 2Z9629–324 |
| T9 | (*) | | TRANSFORMER, RF: osc; unshielded. | V15 output coupling for band 3 | 2C4537–27/T9 |
| T9 | | (*) | TRANSFORMER, RF: osc; unshielded. | V15 output coupling for band 3 | 2Z9629–327 |
| V10 | (*) | (*) | TUBE, electron; type OD3 | Voltage regulator | 2JOD3 |
| V13 | (*) | (*) | TUBE, electron: type 5U4G | Rectifier | 2J5U4G |
| V4 | (*) | (*) | TUBE, electron: type 6AB7 | Second i-f amplifier | 2J6AB7 |
| V3, V7. | (*) | (*) | TUBE, electron: type 6AC7 | V3: First i-f amplifier.<br>V7: F-m limiter. | 2J6AC7<br>2J6AC7 |
| V6, V8. | (*) | (*) | TUBE, electron: type 6H6 | V6: A-m second detector, avc, and anl.<br>V8: F-m discriminator. | 2J6H6 |
| V14 | (*) | (*) | TUBE, electron: type 6J5 | Beat frequency oscillator | 2J6J57 |
| V5 | (*) | (*) | TUBE, electron: type 6SK7 | Third i-f amplifier | 2J6SK7 |
| V9 | (*) | (*) | TUBE, electron: type 6SL7GT | Audio voltage amplifier | 2J6SL7GT |
| V11, V12 | (*) | (*) | TUBE, electron: type 6V6GT/G | Audio amplifiers | 2J6V6GT/G |
| V2 | (*) | (*) | TUBE, electron: type 954 | Converter and mixer | 2J954 |
| V15 | (*) | (*) | TUBE, electron: type 955 | H-f oscillator | 2J955 |
| V1 | (*) | (*) | TUBE, electron: type 956 | R-f amplifier | 2J956 |

☆ U. S. GOVERNMENT PRINTING OFFICE: 1953—255496

# INDEX


| | Paragraph | Page |
|---|---|---|
| Alinement: | | |
| Band 1 | 64*a* | 47 |
| Band 2 | 64*b* | 47 |
| Band 3 | 64*c* | 47 |
| F-m discriminator | 63 | 46 |
| I-f stages | 62 | 46 |
| R-f stages | 64 | 47 |
| Settings of panel controls | 61 | 46 |
| Test equipment requirements | 60 | 46 |
| Controls and instruments, uses | 15 | 8 |
| Demolition of materiel, methods | 79 | 50 |
| Description and data: | | |
| Differences in models | 9 | 4 |
| Packaging data | 5 | 2 |
| Purpose and use of receiver | 3 | 1 |
| Receiver and mounting | 7 | 2 |
| Table of components | 6 | 2 |
| Technical characteristics | 4 | 1 |
| Running spares | 8 | 4 |
| Final testing: | | |
| A-m and c-w intermediate-frequency selectivity | 69 | 48 |
| Audio output | 72 | 48 |
| Avc sensitivity | 71 | 48 |
| Bfo selectivity | 70 | 48 |
| Control settings for sensitivity tests | 67 | 48 |
| Dial calibration | 73 | 48 |
| General | 65 | 47 |
| Operational test | 75 | 49 |
| Signal sensitivity chart | 68 | 48 |
| Test equipment required | 66 | 48 |
| Tuning meter | 74 | 48 |
| Forms and records | 2 | 1 |
| Lubrication: | | |
| General | 29 | 15 |
| Procedure | 30 | 15 |
| Operating instructions: | | |
| Installation of equipment | 12 | 7 |
| Siting | 10 | 7 |
| Uncrating, unpacking, and checking | 11 | 7 |
| Operation under unusual conditions: | | |
| Arctic climates | 20 | 10 |
| Desert climates | 22 | 11 |
| General | 19 | 10 |
| Tropical climates | 21 | 10 |
| Operation under usual conditions: | | |
| A-c operation | 16*a* | 9 |
| D-c operation | 16*b* | 9 |
| Operating procedure | 17 | 9 |
| A-m reception | 17*a* | 9 |
| C-w reception | 17*c* | 10 |
| F-m reception | 17*b* | 9 |
| Remote stand-by | 16*c* | 9 |

| | Paragraph | Page |
|---|---|---|
| Operation under usual conditions—Continued | | |
| Starting procedure | 16 | 9 |
| Stopping procedure | 18 | 10 |
| Organizational maintenance instructions: | | |
| Materials | 24 | 12 |
| Tools | 23 | 12 |
| Preventive maintenance services: | | |
| Definition | 25 | 12 |
| Performing | 28 | 12 |
| Techniques | 26 | 12 |
| Use | 27 | 12 |
| Scope of manual | 1 | 1 |
| Shipment and limited storage: | | |
| Repacking | 76 | 50 |
| Waterproofing and weatherproofing | 77 | 50 |
| Theory: | | |
| A-m second detector, avc and anl | 44 | 25 |
| Audio amplifiers | 46 | 25 |
| Beat frequency oscillator | 45 | 25 |
| Block diagram | 38 | 19 |
| Converter and mixer | 40 | 21 |
| First and second i-f amplifiers | 42 | 22 |
| F-m discriminator | 48 | 30 |
| F-m limiter | 47 | 30 |
| H-f oscillator | 41 | 21 |
| Introduction | 37 | 19 |
| Power supply | 49 | 32 |
| R-f amplifier | 39 | 21 |
| Third i-f amplifier | 43 | 25 |
| Trouble shooting at field maintenance level: | | |
| Checking B+ circuits | 54 | 37 |
| Component sectionalization | 50*b* | 36 |
| Data | 51 | 36 |
| General precautions | 53 | 37 |
| Procedures | 50 | 36 |
| Refinishing | 59 | 46 |
| Replacement of parts | 58 | 46 |
| Signal substitution notes | 56 | 39 |
| Terminal voltage chart | 57 | 39 |
| Test equipment | 52 | 37 |
| Trouble-shooting chart | 55 | 38 |
| Trouble shooting at organizational maintenance level: | | |
| Equipment performance checklist | 36 | 17 |
| Inspection | 34 | 16 |
| Scope | 33 | 16 |
| Using equipment performance checklist | 35 | 16 |
| Weatherproofing: | | |
| Desert maintenance | 31*d* | 16 |
| General | 31*a* | 15 |
| Lubrication | 31*e* | 16 |
| Rustproofing and painting | 32 | 16 |
| Tropical maintenance | 31*d* | 16 |
| Winter maintenance | 31*c* | 16 |

TM 11-867/TO 16-40BC 787-5 RADIO RECEIVERS
BC-787-B AND -C—1953.